LOT F REDEVELOPMENT
HUSKY PROCESSING LANES

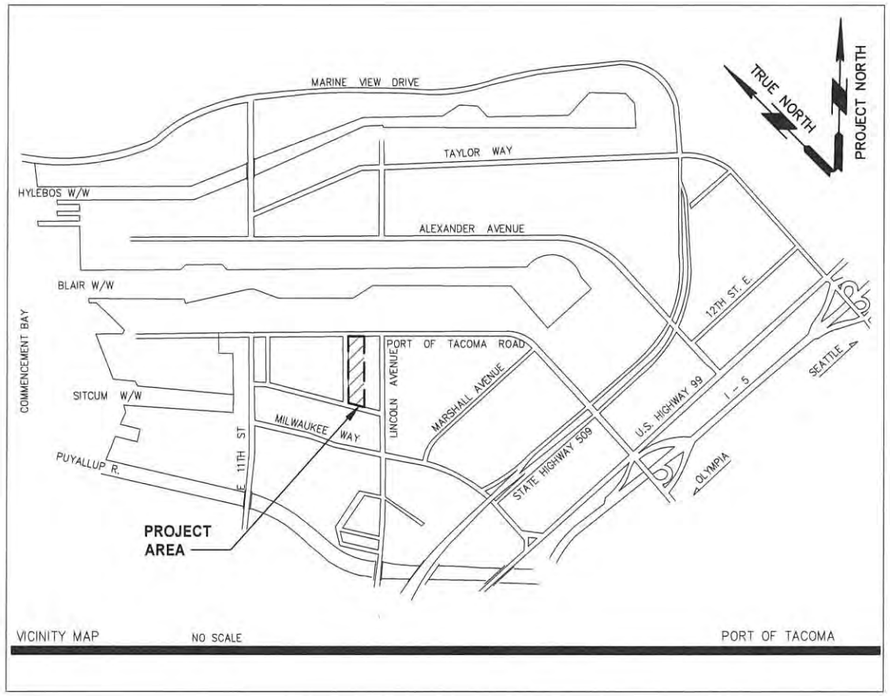

VICINITY MAP NO SCALE PORT OF TACOMA

CONSULTANT:

PRIME/CIVIL ENGINEER

moffatt & nichol
600 UNIVERSITY STREET
SUITE# 610
SEATTLE, WA 98101
(206) 622-0222

ELECTRICAL AND COMMUNICATIONS

CROSS ENGINEERS, INC
923 MLK Jr. Way
Tacoma, WA 98405
Phone: (253) 759-0118
info@crossengineers.com

SHEET INDEX

	INDEX #	SHEET #	SHEET TITLE
A	1	G1.01	COVER SHEET AND SHEET INDEX
	2	G1.02	GENERAL NOTES
	3	G1.03	LEGEND & ABBREVIATIONS
A	4	G2.01	PHASE 1 – UTILITIES & DRIVEWAY
	5	G2.02	PHASE 2 – PROCESSING AREAS
	6	G2.03	PHASE 3 – STRIPING (BY OTHERS)
	7	G2.04	PHASE 4 – BARRIERS AND FENCING
	8	SV1.0	LOT F – TOPOGRAPHIC SURVEY – SHEET 1 OF 9
	9	SV1.1	LOT F – TOPOGRAPHIC SURVEY – SHEET 2 OF 9
	10	SV1.2	LOT F – TOPOGRAPHIC SURVEY – SHEET 3 OF 9
	11	SV1.3	LOT F – TOPOGRAPHIC SURVEY – SHEET 4 OF 9
	12	SV1.4	LOT F – TOPOGRAPHIC SURVEY – SHEET 5 OF 9
	13	SV1.5	LOT F – TOPOGRAPHIC SURVEY – SHEET 6 OF 9
	14	SV1.6	LOT F – TOPOGRAPHIC SURVEY – SHEET 7 OF 9
	15	SV1.7	LOT F – TOPOGRAPHIC SURVEY – SHEET 8 OF 9
	16	SV1.8	LOT F – TOPOGRAPHIC SURVEY – SHEET 9 OF 9
A	17	C1.01	DEMOLITION AND TESC – AREA 1
	18	C1.02	DEMOLITION AND TESC – AREA 2
	19	C1.03	DEMOLITION AND TESC – NOTES & DETAILS
A	20	C2.01	SITE LAYOUT – AREA 1
	21	C2.02	SITE LAYOUT – AREA 2
A	22	C2.03	ENLARGED PLAN – OCR & SCALE
	23	C2.04	ENLARGED PLAN – PROCESSING LANES
	24	C2.05	ENLARGED PLAN – TROUBLE RESOLUTION AREA
A	25	C2.06	CONTROL POINT TABLE
	26	C3.01	DETAILS – PAVEMENT MARKINGS & SIGNS
	27	C3.02	DETAILS – PAVEMENT & BARRIERS
	28	C3.03	DETAILS – INTERCOM PEDESTAL DETAILS
	29	C3.04	DETAILS – FOUNDATIONS
	30	C3.05	DETAILS – CAMERA POLES
	31	C3.06	DETAILS – DRIVER ASSISTANCE SHELTER
	32	C3.07	DETAILS – OCR FOUNDATIONS
	33	C3.08	DETAILS – FENCING & SLIDING GATE
	34	C3.09	DETAILS – BARRIER MOUNTED FENCE & SWING GATE
	35	C3.10	DETAILS – MISCELLANEOUS
	36	E1	ELECTRICAL SYMBOLS, ABBREVIATIONS, LEGEND & GENERAL NOTES
	37	E2	OVERALL LOT F ELECTRICAL SITE PLAN
A	38	E3	PARTIAL ELECTRICAL SITE PLAN
	39	E4	PARTIAL ELECTRICAL SITE PLAN
	40	E5	PARTIAL ELECTRICAL SITE PLAN
A	41	E6	PARTIAL ELECTRICAL SITE PLAN
	42	E7	POWER RISER DIAGRAM ELECTRICAL DETAILS AND SCHEDULES
	43	E8	ELECTRICAL DETAILS
	44	E9	ELECTRICAL DETAILS
	45	E10	CONDUIT & CONDUCTOR SCHEDULE
	46	E11	CONDUIT & CONDUCTOR SCHEDULE
	47	E12	ELECTRICAL VAULT DETAILS
	48	E13	ELECTRICAL EQUIPMENT & COMMUNICATIONS CABINET DETAILS
	49	E14	ELECTRICAL PANEL SCHEDULES
A	50	E15	POWER & COMM AT POLES
	1	WO-01	COVER SHEET AND SHEET INDEX
	2	WO-02	GENERAL NOTES
	3	WO-03	SITE PREP, EROSION CONTROL PLANS – SHEET 1
	4	WO-04	SITE PREP, EROSION CONTROL PLANS – SHEET 2
	5	WO-05	SITE PLAN – SHEET 1
	6	WO-06	SITE PLAN – SHEET 2
	7	WO-07	DRIVEWAY DETAILS
	8	WO-08	BIOSWALE PLAN
	9	WO-09	BIOSWALE SECTIONS

moffatt & nichol
600 UNIVERSITY STREET
SUITE# 610
SEATTLE, WA 98101
(206) 622-0222

MARK:	REVISION:	BY:	APPR:	DATE:
A	SCALE REVISIONS	JAT	BJH	12/11/19

12/02/19

11/19/19 DATE
11/19/19 DATE

S. GRAY
CHECKED BY
B. HALEY
PROJ. ENGR

LOT F REDEVELOPMENT
HUSKY PROCESSING LANES
COVER SHEET AND SHEET INDEX

PRINTED BY: BHaley Dec 11, 2019
SITE ADDRESS: 1754 THORNE RD
TACOMA, WA 98421

G1.01
1 OF 59

TOWNSHIP: 21N | RANGE: 3E | SECTION: 34
DAT-HRZ: WA83/2011-SF | VERT: MLLW
PHASE: BID | PARCEL: LOT F | DRAWING SCALE: AS NOTED

BINDING EDGE

PORT OF TACOMA FILE: Q:\LB\88897-07\CADD_Active_SheetSet\889707-G01.01

GENERAL NOTES

1. THESE NOTES CONTAIN GENERAL INFORMATION AND ARE NOT ALL INCLUSIVE. CONTRACTOR SHALL VERIFY INFORMATION GIVEN HERE WITH SPECIFICATIONS AND OTHER DOCUMENTS AND BRING ANY CONFLICTS TO THE ATTENTION OF THE ENGINEER BEFORE BEGINNING AFFECTED WORK.
2. IN THE EVENT OF CONFLICTING REQUIREMENTS BETWEEN THE CONTRACT DRAWINGS, GENERAL NOTES, AND SPECIFICATIONS, REFER TO DIVISION 1 OF THE CONTRACT SPECIFICATIONS FOR GUIDANCE.
3. ALL WORK SHALL CONFORM TO THE SPECIFICATIONS SUPPLEMENTED BY THE CURRENT VERSION OF THE WASHINGTON STATE DEPARTMENT OF TRANSPORTATION (WSDOT) STANDARD SPECIFICATION FOR ROAD, BRIDGE, AND MUNICIPAL CONSTRUCTION, ENGLISH UNITS. A COPY OF THESE DOCUMENTS SHALL BE KEPT ON SITE BY THE CONTRACTOR DURING CONSTRUCTION.
4. STANDARD PLAN AND TYPE NUMBERS NOTED ON THESE DRAWINGS REFER TO WSDOT STANDARDS, UNLESS OTHERWISE NOTED.
5. ALL LOCATIONS OF EXISTING UTILITIES SHOWN HAVE BEEN ESTABLISHED BY FIELD SURVEY OR OBTAINED FROM AVAILABLE RECORDS AND SHOULD BE CONSIDERED APPROXIMATE ONLY AND NOT NECESSARILY COMPLETE. IT IS THE SOLE RESPONSIBILITY OF THE CONTRACTOR TO INDEPENDENTLY VERIFY THE ACCURACY OF ALL UTILITY LOCATIONS SHOWN AND TO FURTHER DISCOVER AND PROTECT ANY OTHER UTILITIES NOT SHOWN WHICH MAY BE AFFECTED BY THE IMPLEMENTATION OF THIS PLAN. CONTRACTOR SHALL VERIFY LOCATION, DEPTH, SIZE, TYPE AND CONDITION OF EXISTING UTILITIES BEFORE CONSTRUCTION.
6. THE CONTRACTOR SHALL HIRE, USE, AND PAY FOR SERVICES OF PRIVATE LOCATING COMPANY PRIOR TO STARTING WORK IN ANY AREA. CONTRACTOR SHALL LOCATE AND PROTECT ALL UTILITIES DURING CONSTRUCTION AND SHALL CONTACT THE UNDERGROUND UTILITIES LOCATION SERVICE (1-800-424-5555) AT LEAST 48 HOURS PRIOR TO CONSTRUCTION.
7. CONTRACTOR SHALL OBTAIN ALL OVER THE COUNTER PERMITS AND PAY ALL FEES REQUIRED FOR INSTALLATION OF STORM DRAINS, ELECTRICAL WORK, AND OTHER UTILITIES.
8. CONTRACTOR SHALL VERIFY ALL CONDITIONS AND DIMENSIONS AT THE SITE BEFORE STARTING WORK AND SHALL NOTIFY THE ENGINEER OF ANY DISCREPANCIES.
9. AS A MINIMUM REQUIREMENT, ALL DISTURBED AREAS WITHIN CITY RIGHT-OF-WAY SHALL BE RETURNED TO THE EQUIVALENT OF THEIR PRECONSTRUCTION CONDITION IN ACCORDANCE WITH CITY OF TACOMA STANDARDS.
10. THE CONTRACTOR SHALL KEEP STREETS ADJACENT TO THE SITE CLEAN AT ALL TIMES BY SWEEPING. WASHING OF THESE STREETS WILL NOT BE ALLOWED WITHOUT PRIOR APPROVAL.
11. TRAFFIC CONTROL SHALL BE IN ACCORDANCE WITH THE TRAFFIC CONTROL MANUAL. TRAFFIC DIVERSION, INTERRUPTIONS, AND TEMPORARY SIGNAGE SHALL BE COORDINATED WITH CITY OF TACOMA AND WITH TENANT.
12. SEE SV1.0 FOR SURVEY NOTES.

GEOTECHNICAL

1. AN ENVIRONMENTAL CAP IS PRESENT ON THE SOUTH END OF THE SITE AS SHOWN ON THE PLANS.
2. IF UNSUITABLE SUBGRADE IS FOUND DURING EXCAVATION, THE UNSUITABLE MATERIAL SHALL BE OVER EXCAVATED PER DIRECTION OF THE GEOTECHNICAL ENGINEER AND REPLACED WITH GRAVEL BACKFILL COMPACTED TO 95 PERCENT DRY DENSITY PER WSDOT STANDARD SPECIFICATIONS.
3. A GEOTECHNICAL REPORT PREPARED BY HART CROWSER, INC. TITLED "LOT F REDEVELOPMENT - PORT OF TACOMA, TACOMA, WASHINGTON", NO. 19322-00, AND DATED NOVEMBER 6, 2017 IS AVAILABLE FOR REVIEW AS AN APPENDIX TO THE PROJECT MANUAL. THE CONTRACTOR SHALL THOROUGHLY FAMILIARIZE THEMSELVES WITH THE CONTENTS OF THE REPORT AND MAKE THEIR OWN INTERPRETATION OF ITS CONTENTS.

CODES AND STANDARDS

ALL WORK SHALL CONFORM TO THE MINIMUM REQUIREMENTS FOR THE FOLLOWING CODES AND STANDARDS (PARTIAL LIST):

1. INTERNATIONAL BUILDING CODE (IBC), 2015 EDITION, AS AMENDED AND ADOPTED BY THE CITY OF TACOMA.
2. AMERICAN SOCIETY OF CIVIL ENGINEERS (ASCE), MINIMUM DESIGN LOADS FOR BUILDINGS AND OTHER STRUCTURES, ASCE/ANSI 7-10, 2010.
3. AMERICAN CONCRETE INSTITUTE (ACI), BUILDING CODE REQUIREMENTS FOR STRUCTURAL CONCRETE AND COMMENTARY, ACI 318-14, 2014.
4. AMERICAN INSTITUTE OF STEEL CONSTRUCTION (AISC), CODE OF STANDARD PRACTICE FOR STEEL BUILDINGS AND BRIDGES, 14TH EDITION.
5. AMERICAN WELDING SOCIETY (AWS), STRUCTURAL WELDING CODE - STEEL, AWS D1.1, 2015.

LIVE LOAD DESIGN CRITERIA

1. ALL UNDERGROUND STRUCTURES SHALL BE DESIGNED TO ACCOMMODATE THE FOLLOWING DESIGN LIVE LOADS:
   a. TOP PICK LOADING:
      - 219 KIP AXLE LOAD, PLUS 30% IMPACT
      - 4 TIRES PER AXLE
      - 230 PSI CONTACT PRESSURE
      - 23" DUAL WHEEL SPACING

REINFORCED CONCRETE

1. ALL CONCRETE WORK SHALL BE PERFORMED IN ACCORDANCE WITH ACI 301, UON.
2. ALL CONCRETE SHALL BE NORMAL WEIGHT CONCRETE.
3. ALL DETAILING, FABRICATION AND ERECTION OF REINFORCING STEEL SHALL CONFORM TO THE ACI MANUAL OF STANDARD PRACTICE FOR DETAILING REINFORCED CONCRETE STRUCTURES: ACI 315 AND ACI SP-66.
4. REINFORCING STEEL
   a. ALL REINFORCING STEEL SHALL BE DEFORMED STEEL BARS CONFORMING TO ASTM A615, GRADE 60.
   b. LAP SPLICE ALL REINFORCING BARS AS NOTED ON SCHEDULE C THIS SHEET.
   c. PROVIDE CORNER BARS AT ALL CORNERS. CORNER BARS SHALL MATCH THE NUMBER, SPACING, AND DIAMETER OF ALL HORIZONTAL REINFORCEMENT AT THE CORNER, UON. TERMINATED STRAIGHT BARS SHALL EXTEND FULL AVAILABLE LENGTH INTO ADJOINING MEMBERS.
   d. MECHANICAL SPLICES SHALL DEVELOP AT LEAST 125 PERCENT OF THE YIELD STRENGTH OF THE BAR IN TENSION.
   e. REINFORCING SHALL BE SUPPORTED AS SPECIFIED BY THE PROJECT SPECIFICATIONS AND THE CONCRETE REINFORCING STEEL INSTITUTE (CRSI) MANUAL OF STANDARD PRACTICE (MSP). REINFORCING STEEL SHALL BE DETAILED IN ACCORDANCE WITH THE ACI MANUAL OF STANDARD PRACTICE FOR DETAILING REINFORCED CONCRETE STRUCTURES", ACI 315.
   f. ALL HORIZONTAL REINFORCEMENT AT DISCONTINUITIES AND CORNERS SHALL END WITH STANDARD 90 DEGREE HOOKS IN ACCORDANCE WITH ACI 315, UON.
   g. PROVIDE THE FOLLOWING CONCRETE COVER OVER REINFORCEMENT, UON.

      CONCRETE AGAINST GROUND: 3"
      EXPOSED CONDITIONS:
      #5 BAR AND SMALLER: 1-1/2"
      #6 BAR AND LARGER: 2"

      WHEN SPLICING BARS OF DIFFERENT SIZES, USE SPLICE LENGTH VALUES FOR SMALLER BARS.
5. PRECAST CONCRETE

		MINIMUM COMPRESSIVE STRENGTH AT 28 DAYS
a.	PRECAST VAULTS	4,500 PSI

6. CAST-IN-PLACE CONCRETE

		MINIMUM COMPRESSIVE STRENGTH AT 28 DAYS	MAX W/C
a.	CAST-IN-PLACE CONCRETE, UON	4,500 PSI	0.45
b.	FENCE POSTS	2,500 PSI	0.45

7. ALL EXPOSED CORNERS SHALL BE CHAMFERED 3/4 IN.
8. CONSTRUCTION JOINTS SHALL BE PROVIDED ONLY AS NOTED ON THE DRAWINGS AND AS SPECIFICALLY PERMITTED BY THE ENGINEER.
9. CONCRETE MIX SHALL BE AIR ENTRAINED WITH A TARGET OF 5% +/- 1 1/2%, UON IN THE SPECIFICATIONS.
10. GROUT SHALL BE NON-METALLIC AND NON-SHRINK WITH A MINIMUM COMPRESSIVE STRENGTH OF 5,000 PSI AT 28 DAYS, UON.
11. CONCRETE ANCHORS
    a. USE OF DRILLED ADHESIVE CONCRETE ANCHORS, WHERE NOT SPECIFIED IN THE DOCUMENTS, SHALL BE SUBJECT TO APPROVAL BY THE ENGINEER.
    b. EPOXY OR ADHESIVE-TYPE ANCHORS SHALL BE INSTALLED IN ACCORDANCE WITH THE MANUFACTURER'S RECOMMENDATIONS. SPECIAL INSPECTION IS REQUIRED FOR ADHESIVE ANCHORS.
    c. ACCEPTABLE ADHESIVES ARE HILTI HIT HY 200, ICE, OR HVA SYSTEMS; OR SIMPSON EPOXY TIE (SET) SYSTEM. INTERNATIONAL CONFERENCE OF BUILDING OFFICIAL (ICBO) OR INTERNATIONAL CODE COUNCIL (ICC) REPORTS SHALL BE SUBMITTED FOR ALL ADHESIVE ANCHOR PRODUCTS.
    d. ACCEPTABLE EXPANSION ANCHORS ARE HILTI KB TZ, SIMPSON STRONG-BOLT2, POWERS POWER-STUD+SD1, OR EQUIVALENT.

MISCELLANEOUS STEEL

1. ALL STEEL WORK SHALL BE IN ACCORDANCE WITH AISC SPECIFICATIONS FOR DESIGN, FABRICATION AND ERECTION OF STRUCTURAL STEEL FOR BUILDINGS (AISC).
2. ALL MISCELLANEOUS STEEL SHAPES AND PLATES, UON SHALL CONFORM TO ASTM A36.
3. ALL HSS SECTIONS SHALL USE ASTM A500 GR B.
4. STEEL PLATE NOTED AS GRADE 50 SHALL CONFORM TO ASTM A572, GRADE GRADE 50.
5. ALL BOLTS SHALL CONFORM TO ASTM A307, UON ON THE DRAWINGS.
6. ALL ANCHOR BOLTS SHALL CONFORM TO ASTM F1554, GRADE 55 (TYPICAL), UON.
7. PROVIDE BLEED HOLES IN EMBEDDED PLATES AND SHAPES AT 24-IN, ON CENTER MAXIMUM.
8. ALL MISCELLANEOUS PIPES AND SLEEVES, INCLUDING SLEEVES FOR BOLLARDS, SHALL CONFORM TO ASTM A53, GRADE B.
9. ALL NUTS SHALL BE ASTM A563, UON.
10. ALL WASHERS SHALL BE ASTM F436, UON.
11. ALL STEEL ITEMS SHALL BE PAINTED STANDARD GRAY IN ACCORDANCE WITH THE CONTRACT SPECIFICATIONS, UON.
12. SEE THE SPECIFICATIONS FOR ITEMS TO RECEIVE MARINE COATING IN ADDITION TO GALVANIZING.

SCHEDULE C

BAR SIZE	LAP SPLICE LENGTH IN INCHES	
	OTHER BARS	TOP BARS
#3	19	24
#4	25	32
#5	31	40
#6	37	48
#7	54	70
#8	62	80
#9	70	91
#10	79	102
#11	87	113

NOTES:

1. THE ABOVE SPLICE LENGTHS APPLY TO BARS WITH A MINIMUM SPACING OF 3db INCHES ON CENTER.

   db = BAR NOMINAL DIAMETER
2. DEVELOPMENT LENGTH OF BARS TO BE 77% OF LAP SPLICE LENGTH.
3. TOP BARS ARE HORIZONTAL BARS WITH MORE THAN 12 INCHES OF CONCRETE CAST BELOW THE BARS.

C / - **TYPICAL REINFORCING LAPS**
SCALE: NTS

WELDING

1. ALL WELDING SHALL BE PERFORMED BY WELDERS QUALIFIED FOR THE WELD AND POSITION SHOWN IN ACCORDANCE WITH AWS AND HAVING CURRENT CERTIFICATION FROM WASHINGTON ASSOCIATION OF BUILDING OFFICIALS (WABO).
2. ALL WELDS SHALL BE PERFORMED WITH THE PROCEDURES PREQUALIFIED OR QUALIFIED IN ACCORDANCE WITH AWS D1.1 AND D1.4.
3. THE WELDS SHOWN ARE FOR THE FINAL CONNECTIONS. FIELD WELD SYMBOLS ARE SHOWN WHERE FIELD WELDS ARE REQUIRED BY THE STRUCTURAL DESIGN. THE CONTRACTOR IS RESPONSIBLE FOR DETERMINING IF A WELD SHOULD BE SHOP OR FIELD WELDED IN ORDER TO FACILITATE THE STRUCTURAL STEEL ERECTION.
4. WELDING ELECTRODES SHALL BE 70 KSI STRENGTH AND SHALL BE LOW HYDROGEN MATERIAL.
5. ALL FAYING SURFACES OF FABRICATED METAL COMPONENTS EXPOSED TO WEATHER SHALL BE SEAL WELDED.
6. MINIMUM WELD SIZE 3/16", UON.

SPECIAL INSPECTIONS:

SPECIAL INSPECTION SHALL BE IN ACCORDANCE WITH IBC 2015, CHAPTER 17 WITH CITY OF TACOMA AMENDMENTS. SEE BELOW FOR INSPECTION SCHEDULE:

MATERIAL	INSPECTION ITEM	REFERENCE STANDARD	CONTINUOUS	PERIODIC
CONCRETE	REINFORCING	ACI 318		X
	EMBEDDED BOLTS			
	VERIFY DESIGN MIX STRENGTH, SLUMP, AIR, TEMPERATURE OF FRESH CONCRETE			
STEEL	MATERIAL VERIFICATION OF BOLTS	AISC 360, SEC A3.3		X
	BOLT INSTALLATION	AISC 360, SEC M2.5		X
	MATERIAL VERIFICATION OF WELD MATERIAL	AISC 360, SEC A3.5 AND APPLICABLE AWS A5 DOCUMENTS		X
	CJP AND PJP GROOVE WELDS	AWS D1.1	X	
	MULTI PASS FILLET WELDS, SINGLE PASS FILLET WELDS >5/16 PLUG AND SLOT WELDS	AWS D1.1	X	
	FILLET WELDS <5/16			X

PERMIT SET
ISSUED: 2019-11-19

maffatt & nichol
800 UNIVERSITY STREET SUITE# 610 SEATTLE, WA 98101 (206) 622-5022

MARK:	REVISION:	BY:	APPR:	DATE:

S. GRAY
CHECKED BY
B. HALEY
PROJ. ENGR

11/19/19 DATE
11/19/19 DATE

PRINTED BY: BHaley Nov 21, 2019
SITE ADDRESS: 1754 THORNE RD TACOMA, WA 98421

LOT F REDEVELOPMENT
HUSKY PROCESSING LANES
GENERAL NOTES

TOWNSHIP: 21N | RANGE: 3E | SECTION: 34
DAT-HRZ: WA83/2011-SF | VERT: MLLW
PARCEL: LOT F | DRAWING SCALE: AS NOTED

G1.02
2 OF 59

PHASE: PERMIT SET

BINDING EDGE

PORT OF TACOMA FILE: Q:\LB\8897-07\CADD_Active_SheetSet\889707-G01.02

BINDING EDGE

ABBREVIATIONS

ACI	AMERICAN CONCRETE INSTITUTE
ACP	ASPHALT CONCRETE PAVEMENT
AISC	AMERICAN INSTITUTE OF STEEL CONSTRUCTION
ALUM	ALUMINUM
ANSI	AMERICAN NATIONAL STANDARDS INSTITUTE
APPROX	APPROXIMATE
ASCE	AMERICAN SOCIETY OF CIVIL ENGINEERS
ASTM	AMERICAN SOCIETY FOR TESTING MATERIALS
AWG	AMERICAN WIRE GAUGE
AWS	AMERICAN WELDING SOCIETY
BOT, BOTT, BTM	BOTTOM
C–	C–CHANNEL
CB	CATCH BASIN
℄	CENTERLINE
CTL	CENTERLINE
CLR	CLEAR
COMM	COMMUNICATIONS
CONC	CONCRETE (PORTLAND CEMENT CONCRETE)
COORD	COORDINATE
CU	COPPER
C/C	CENTER TO CENTER
DI, DIP	DUCTILE IRON PIPE
DIA	DIAMETER
DIM	DIMENSION
E	EAST OR EASTING
EA	EACH
ELEC	ELECTRICAL
ELEV	ELEVATION
ENV	ENVIRONMENTAL
EQ	EQUAL
EW	EACH WAY
EX	EXISTING
EXP	EXPANSION
FT	FEET
G or GA	GAUGE
GALV	GALVANIZED
HMA	HOT MIX ASPHALT
HORIZ OR HOR	HORIZONTAL
IE	INVERT ELEVATION
IN	INCH OR INCHES
KIPS	KILO–POUND (THOUSANDS OF POUNDS)
KSI	KIPS PER SQUARE INCH
LB/FT	POUNDS PER FOOT
LF	LINEAR FEET
MAX	MAXIMUM
MIN	MINIMUM
MLLW	MEAN LOWER LOW WATER
M	METER
MUTCD	MANUAL ON UNIFORM TRAFFIC CONTROL DEVICES
N	NORTH OR NORTHING
NAD	NORTH AMERICAN DATUM
NE	NORTHEAST
NTS	NOT TO SCALE
NW	NORTHWEST
OC	ON CENTER
OCR	OPTICAL CHARACTER RECOGNITION
OD	OUTSIDE DIAMETER
OWS	OIL–WATER SEPARATOR
PG	PERFORMANCE GRADE
PORT	PORT OF TACOMA
PSI	POUNDS PER SQUARE INCH
PSF	POUNDS PER SQUARE FOOT
PVC	POLYVINYL CHLORIDE
R	RADIUS
REINF	REINFORCEMENT
REQ'D	REQUIRED
ROW	RIGHT OF WAY
S	SOUTH
SCH	SCHEDULE
SD	STORM DRAINAGE
SE	SOUTHEAST
SIM	SIMILAR
SPA	SPACING OR SPACED
SQ	SQUARE
ST	STREET
STL	STEEL
STD	STANDARD
SW	SOUTHWEST

ABBREVIATIONS (CONT'D)

TC	TOP OF CONCRETE
TESC	TEMPORARY EROSION AND SEDIMENT CONTROL
TYP	TYPICAL
T&B	TOP AND BOTTOM
UG	UNDERGROUND
UON	UNLESS OTHERWISE NOTED
VERT OR V	VERTICAL
WIM	WEIGH IN MOTION
WSDOT	WASHINGTON STATE DEPARTMENT OF TRANSPORTATION
WUT	WASHINGTON UNITED TERMINAL
WWM	WELDED WIRE MESH
w/	WITH
W/C	WATER/CEMENT RATIO
W/W	WATERWAY
&	AND
@	AT
*	ASTERISK
∟	ANGLE
℄	CENTERLINE
Ø	NOMINAL DIAMETER OR PHASE
°	DEGREES
'	MINUTES OR FEET
#	NUMBER OR POUNDS
%	PERCENT
⅊	PROPERTY LINE OR PLATE
"	SECONDS OR INCH

LEGEND

EXISTING	PROPOSED	DESCRIPTION
		FOUND MONUMENT AS NOTED
		SET REBAR W/ CONTROL CAP
		SANITARY SEWER MANHOLE
		UTILITY CLEAN OUT
		STORM MANHOLE
		STORM CATCH BASIN
		STORM CULVERT
		ROOF DRAIN
		WATER MANHOLE
		WATER VALVE
		WATER METER
		FIRE HYDRANT
		THRUST BLOCK
		WATER VAULT
		FIRE DEPARTMENT CONNECTION
		WATER BLOW OFF
		POST INDICATOR VALVE
		IRRIGATION CONTROL VALVE
		GAS VALVE
		GAS METER
		POWER METER
		POWER CABINET
		UTILITY POLE
		GUY ANCHOR
		JUNCTION BOX
		POWER VAULT
		POWER TRANSFORMER
		POWER MANHOLE
		LIGHT POLE
		TRAFFIC LOOP
		UTILITY VAULT
		UTILITY MANHOLE
		COLUMN
		BOLLARD
		UTILITY POLE
		SIGN
		TRAFFIC SIGNAL
		MONITORING WELL
		TAX PARCEL NUMBER
		TELECOM VAULT
		TELECOM MANHOLE
		TELECOM CABINET
		MAILBOX
—SD—		STORM DRAIN LINE
		SANITARY SEWER LINE
		BURIED WATER LINE
		BURIED GAS LINE

LEGEND (CONT'D)

EXISTING	PROPOSED	DESCRIPTION
		BURIED POWER LINE
		RECORD BURIED POWER
		BURIED TELECOM LINE
		RECORD TELECOM LINE
		OVERHEAD POWER LINE
		CHAIN LINK FENCE
		WOOD OR SPLIT RAIL FENCE
		RAILROAD TRACKS
		CONCRETE SURFACE
	OR	ASPHALT SURFACE

REFERENCE CALLOUTS

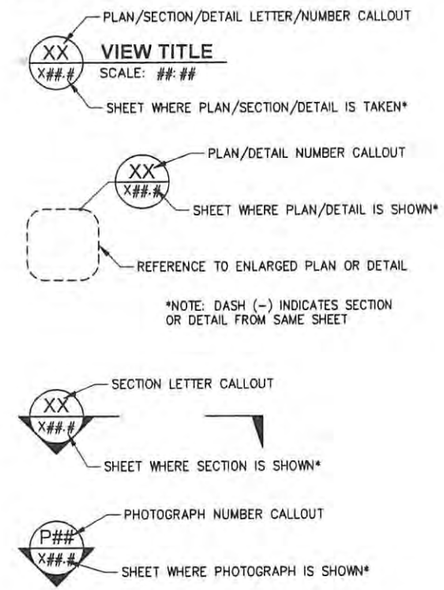

NOTES:

1. ADDITIONAL LEGEND FOR SURVEY ITEMS SHOWN ON SV1.0.

PERMIT SET
ISSUED: 2019-11-19

PORT OF TACOMA FILE: Q:\LB8897-07\CADD_Active_SheetSet\889707-G01.03

PORT OF TACOMA | HUSKY

moffatt & nichol
600 UNIVERSITY STREET
SUITE# 610
SEATTLE WA 98101
(206) 622-0222

MARK:	REVISION:	BY:	APPR:	DATE:

BRYON HALEY, STATE OF WASHINGTON, REGISTERED PROFESSIONAL ENGINEER

		DATE
S. GRAY	CHECKED BY	11/19/19
B. HALEY	PROJ. ENGR	11/19/19

PRINTED BY: BHaley Nov 21, 2019
SITE ADDRESS: 1754 THORNE RD
TACOMA, WA 98421

LOT F REDEVELOPMENT
HUSKY PROCESSING LANES
LEGEND & ABBREVIATIONS

TOWNSHIP: 21N | RANGE: 3E | SECTION: 34
DAT–HRZ: WA83/2011–SF | VERT: MLLW
PHASE: PERMIT SET | PARCEL: LOT F | DRAWING SCALE: AS NOTED

G1.03
3 OF 59

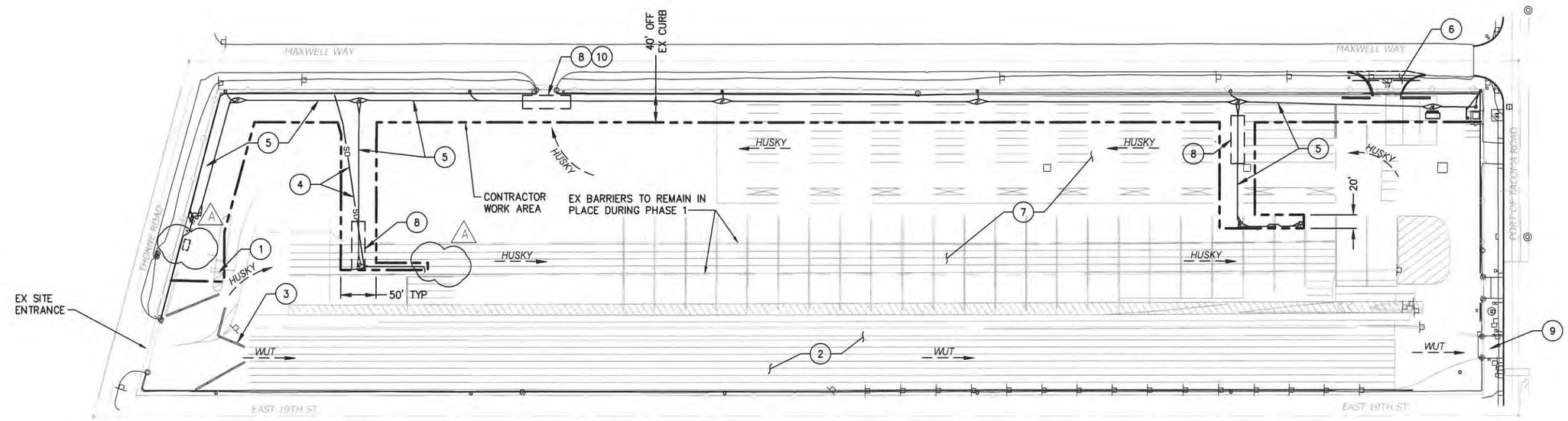

1 PHASE 1 - UTILITIES & DRIVEWAY

SCALE: 1" = 80'

PHASING NOTES:

1. TEMPORARY FENCING AND/OR CONCRETE BARRIERS SHALL BE USED TO CORDON OFF THE CONTRACTOR WORK AREAS FROM THE ACTIVE TRUCK QUEUE AND CIRCULATION AREAS.
2. THE TRUCK CIRCULATION AND QUEUE AREAS SHALL BE OPERATIONAL AND CLEAR OF MATERIALS AND EQUIPMENT DURING ALL OPERATING HOURS. THE PORT AND/OR THEIR TENANTS WILL COORDINATE THE TRUCK QUEUE AND CIRCULATION WITHIN AREAS INDICATED.
3. PHASING KEY NOTES INDICATE GENERAL WORK REQUIRED. SEE REMAINING DOCUMENTS FOR EXTENT AND DETAILS.
4. WORK AREA EXTENDS 5' MAX BEYOND PROPOSED IMPROVEMENTS UNLESS OTHERWISE INDICATED.

PHASING KEY NOTES:

1. REMOVE EX ELEC PANEL
2. EX WUT QUEUE LANES TO REMAIN OPERATIONAL
3. EX BARRIERS PLACED AS TEMPORARY CHANNELIZATION TO REMAIN
4. CONSTRUCT WIM SCALE SUMP DRAIN LINE
5. CONSTRUCT ELECTRICAL AND COMMUNICATIONS INFRASTRUCTURE
6. CONSTRUCT NEW MAXWELL DRIVEWAY
7. EX HUSKY QUEUE LANES TO REMAIN OPERATIONAL
8. PROVIDE 60' MIN OF STEEL PLATES OVER OPEN TRENCH DURING OPERATIONAL HOURS
9. EX WUT EXIT LANES TO REMAIN OPEN DURING CONSTRUCTION
10. EX HUSKY EXIT TO REMAIN OPERATIONAL DURING CONSTRUCTION

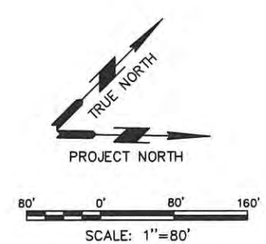

BINDING EDGE

PORT OF TACOMA FILE: Q:\LB8897-07\CADD_Active_SheetSet\889707-G02.01

moffatt & nichol
600 UNIVERSITY STREET
SUITE# 610
SEATTLE, WA 98101
(206) 622-0222

MARK:	REVISION:	BY:	APPR:	DATE:
A	SCALE REVISIONS	JAT	BJH	12/11/19

12/02/19

S. GRAY 11/19/19
CHECKED BY DATE
B. HALEY 11/19/19
PROJ. ENGR DATE

PRINTED BY: BHaley Dec 11, 2019
SITE ADDRESS: 1754 THORNE RD
TACOMA, WA 98421

LOT F REDEVELOPMENT
HUSKY PROCESSING LANES
PHASE 1 - UTILITIES & DRIVEWAY

TOWNSHIP: 21N | RANGE: 3E | SECTION: 34
DAT-HRZ: WA83/2011-SF | VERT: MLLW
PARCEL: LOT F | DRAWING SCALE: AS NOTED

PHASE: BID

G2.01
4 OF 59

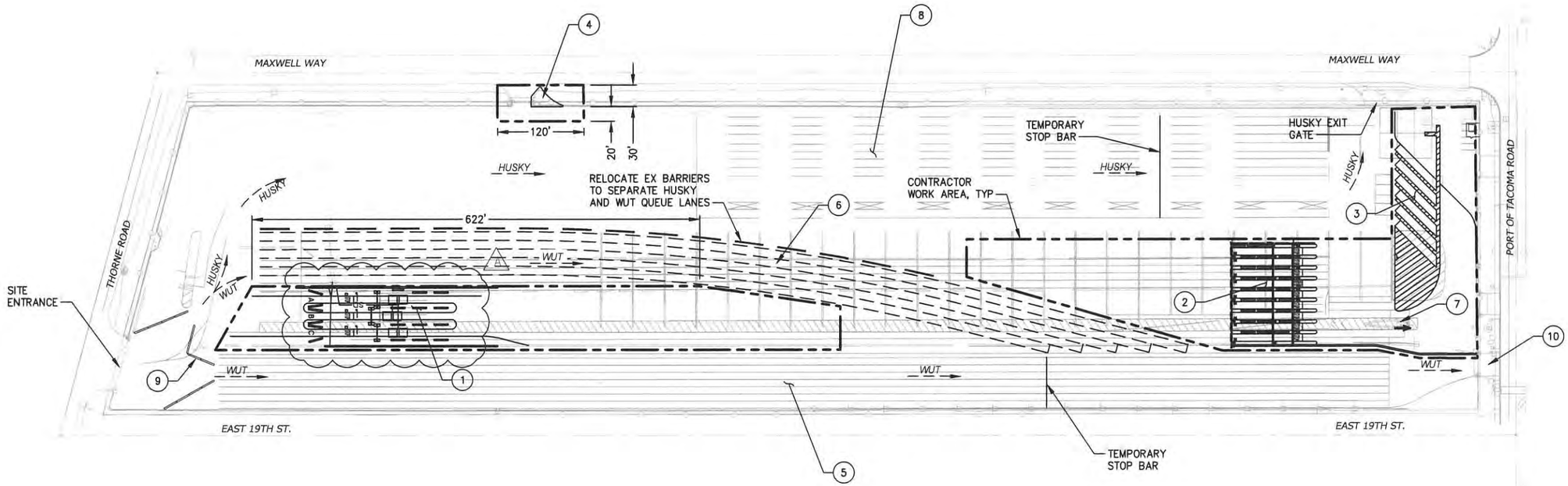

1 PHASE 2 - PROCESSING AREAS

SCALE: 1" = 80'

PHASING NOTES:

1. TEMPORARY FENCING AND/OR RELOCATED EX JERSEY BARRIERS SHALL BE USED TO CORDON OFF THE CONTRACTOR WORK AREAS FROM THE ACTIVE TRUCK QUEUE AND CIRCULATION AREAS.
2. THE TRUCK CIRCULATION AND QUEUE AREAS SHALL BE OPERATIONAL AND CLEAR OF MATERIALS AND EQUIPMENT DURING ALL OPERATING HOURS. THE PORT AND/OR THEIR TENANTS WILL COORDINATE THE TRUCK QUEUE AND CIRCULATION WITHIN AREAS INDICATED.
3. PHASING KEY NOTES INDICATE GENERAL WORK REQUIRED. SEE REMAINING DOCUMENTS FOR EXTENT AND DETAILS.
4. WORK AREA EXTENDS 5' MAX BEYOND PROPOSED IMPROVEMENTS UNLESS OTHERWISE INDICATED.

PHASING KEY NOTES:

1. CONSTRUCT WIM SCALES AND OCR GATES
2. CONSTRUCT INTERCOM AND CAMERA FOUNDATIONS
3. CONSTRUCT TROUBLE AREA
4. CONSTRUCT MAXWELL ENTRANCE WIDENING
5. EX WUT QUEUE LANES TO REMAIN OPERATIONAL (7 LANES)
6. TEMPORARY STRIPING FOR WUT QUEUE LANES, 5 12'-WIDE LANES; FIELD VERIFY LOCATION WITH ENGINEER; WORK TO BE DONE BETWEEN PHASES 1 AND 2 DURING NON OPERATING HOURS
7. REMOVE EX ELEC PANEL
8. EX HUSKY QUEUE LANES WITH REVERSE TRUCK CIRCULATION (TRUCKS EXITING NEW DRIVEWAY); FIELD VERIFY LOCATION WITH ENGINEER
9. EX BARRIERS PLACED AS TEMPORARY CHANNELIZATION TO REMAIN
10. EX WUT GATE TO REMAIN OPERATIONAL

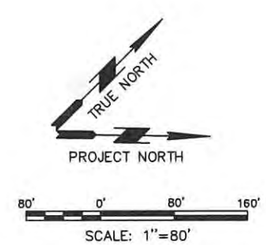

BINDING EDGE

PORT OF TACOMA FILE: Q:\LB\8897-07\CADD_Active_SheetSet\889707-G02.02

moffatt & nichol
600 UNIVERSITY STREET
SUITE# 610
SEATTLE, WA 98101
(206) 622-0222

husky

MARK:	REVISION:	BY:	APPR:	DATE:
A	SCALE REVISIONS	JAT	BJH	12/11/19

12/02/19

S. GRAY	CHECKED BY	11/19/19 DATE
B. HALEY	PROJ. ENGR	11/19/19 DATE
PRINTED BY: BHaley Dec 11, 2019		
SITE ADDRESS: 1754 THORNE RD TACOMA, WA 98421		

LOT F REDEVELOPMENT
HUSKY PROCESSING LANES
PHASE 2 - PROCESSING AREAS

TOWNSHIP: 21N	RANGE: 3E	SECTION: 34
DAT-HRZ: WA83/2011-SF	VERT: MLLW	
PARCEL: LOT F	DRAWING SCALE: AS NOTED	

PHASE: BID

G2.02
5 OF 59

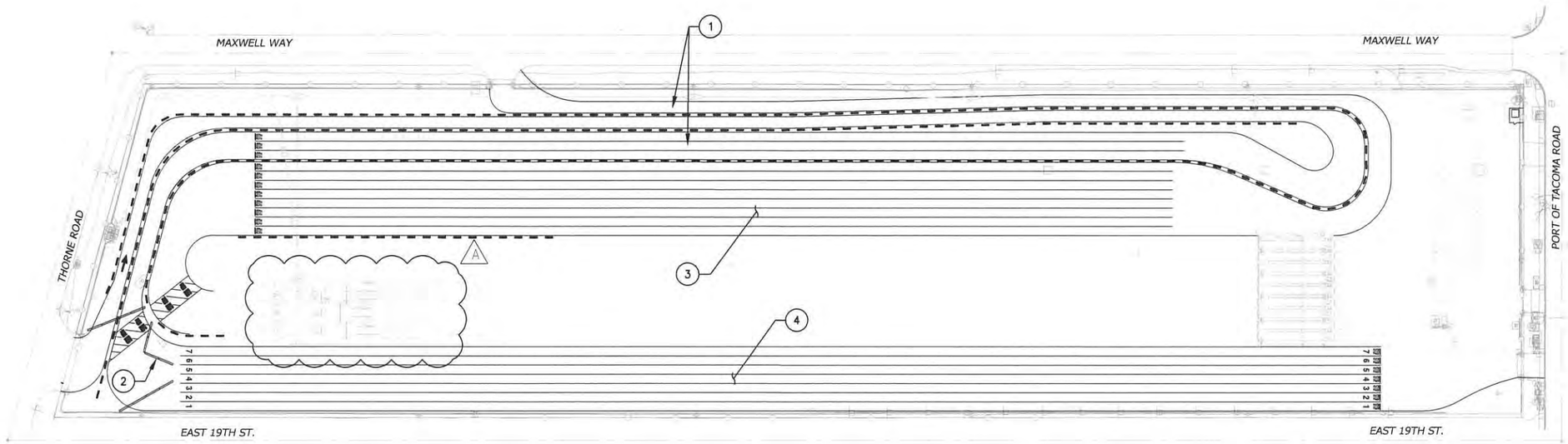

1 PHASE 3 - STRIPING (BY OTHERS)

SCALE: 1" = 80'

PHASING NOTES:

1. PHASE 3 WORK TO BE COMPLETED OVER A WEEKEND OUTSIDE OF OPERATIONAL HOURS BY OTHERS.
2. CONTRACTOR SHOULD ANTICIPATE A DELAY OF WORK OF UP TO ONE (1) WEEK BETWEEN PHASES 2 AND 4

PHASING KEY NOTES:

1. STRIPE NEW WUT ENTRANCE CORRIDOR (BY OTHERS)
2. REMOVE TEMPORARY BARRIERS (BY OTHERS)
3. STRIPE HUSKY ENTRANCE CORRIDOR (BY OTHERS)
4. RESTRIPE WUT QUEUING LANES (BY OTHERS)

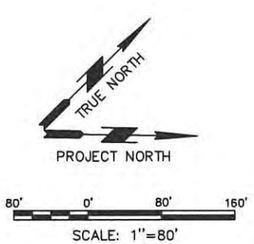

BINDING EDGE

PORT OF TACOMA FILE: Q:\LB\8897-07\CADD_Active_SheetSet\889707-G02.03

moffatt & nichol
600 UNIVERSITY STREET
SUITE# 610
SEATTLE, WA 98101
(206) 622-0222

MARK:	REVISION:	BY:	APPR:	DATE:
A	SCALE REVISIONS	JAT	BJH	12/11/19

12/02/19

11/19/19 DATE
11/19/19 DATE

S. GRAY
CHECKED BY
B. HALEY
PROJ. ENGR

PRINTED BY: BHaley Dec 11, 2019
SITE ADDRESS: 1754 THORNE RD
TACOMA, WA 98421

LOT F REDEVELOPMENT
HUSKY PROCESSING LANES
PHASE 3 - STRIPING (BY OTHERS)

TOWNSHIP: 21N | RANGE: 3E | SECTION: 34
DAT-HRZ: WA83/2011-SF | VERT: MLLW
PARCEL: LOT F | DRAWING SCALE: AS NOTED
PHASE: BID

G2.03

6 OF 59

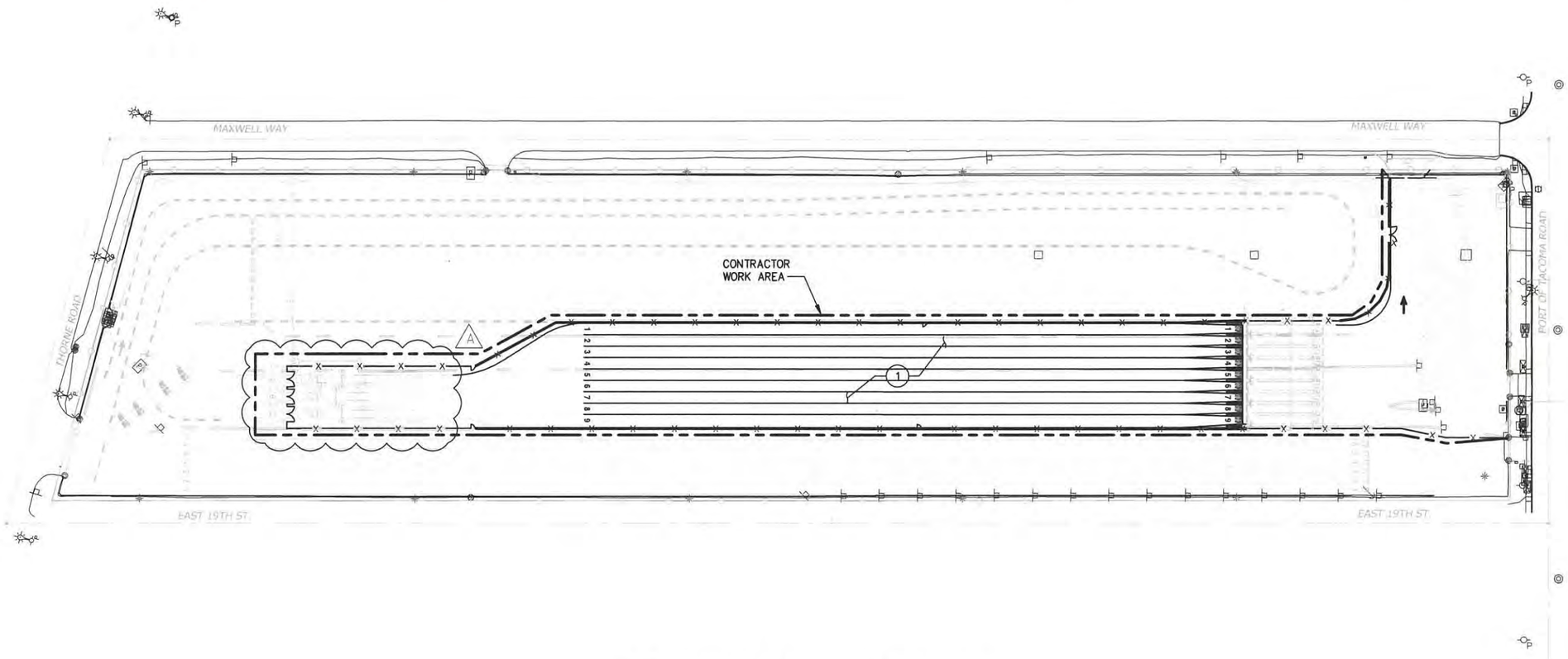

1 PHASE 4 - BARRIERS AND FENCING

SCALE: 1" = 80'

PHASING NOTES:

1. TEMPORARY FENCING AND/OR RELOCATED EX JERSEY BARRIERS SHALL BE USED TO CORDON OFF THE CONTRACTOR WORK AREAS FROM THE ACTIVE TRUCK QUEUE AND CIRCULATION AREAS.
2. THE TRUCK CIRCULATION AND QUEUE AREAS SHALL BE OPERATIONAL AND CLEAR OF MATERIALS AND EQUIPMENT DURING ALL OPERATING HOURS. THE PORT AND/OR THEIR TENANTS WILL COORDINATE THE TRUCK QUEUE AND CIRCULATION WITHIN AREAS INDICATED.
3. PHASING KEY NOTES INDICATE GENERAL WORK REQUIRED. SEE REMAINING DOCUMENTS FOR EXTENT AND DETAILS.
4. WORK AREA EXTENDS 5' MAX BEYOND PROPOSED IMPROVEMENTS UNLESS OTHERWISE INDICATED.

PHASING KEY NOTES:

(1) COMPLETE HUSKY QUEUING AND PROCESSING LANES, GATES, AND FENCE ON BARRIERS. CONTRACTOR SHALL ALLOW FOR A MINIMUM OF ONE 12'-WIDE TRUCK LANE THROUGH THE WORK AREA. COORDINATE WITH HUSKY.

TRUE NORTH

PROJECT NORTH

80' 0' 80' 160'

SCALE: 1"=80'

moffatt & nichol
600 UNIVERSITY STREET
SUITE# 610
SEATTLE, WA 98101
(206) 622-0222

MARK:	REVISION:	BY:	APPR:	DATE:
A	SCALE REVISIONS	JAT	BJH	12/11/19

12/02/19

11/19/19 DATE

11/19/19 DATE

S. GRAY
CHECKED BY
B. HALEY
PROJ. ENGR

PRINTED BY: BHaley Dec 11, 2019
SITE ADDRESS: 1754 THORNE RD
TACOMA, WA 98421

LOT F REDEVELOPMENT
HUSKY PROCESSING LANES
PHASE 4 - BARRIERS AND FENCING

TOWNSHIP: 21N | RANGE: 3E | SECTION: 34
DAT-HRZ: WA83/2011-SF | VERT: MLLW
PARCEL: LOT F | DRAWING SCALE: AS NOTED
PHASE: BID

G2.04
7 OF 59

BINDING EDGE

PORT OF TACOMA FILE: Q:\LB\8897-07\CADD_Active_SheetSet\889707-G02.04

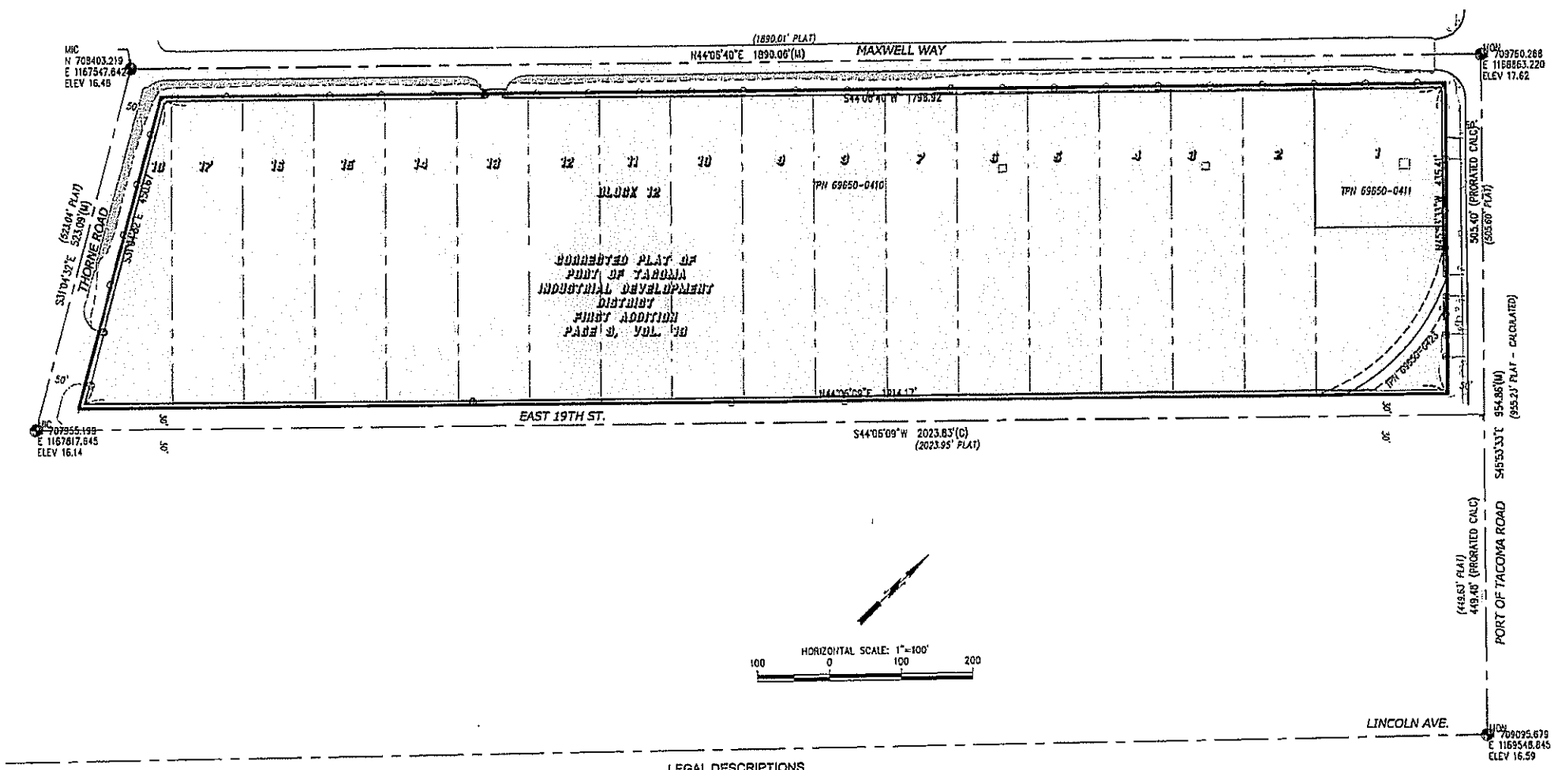

VERTICAL DATUM

MLLW (PER PORT OF TACOMA 2016 SURVEY CONTROL MAP)

TIDE 22 1933 BENCHMARK: LOCATED AT NE CORNER OF 11TH ST. BRIDGE AT THE INTERSECTION OF E. 11TH ST. AND MILWAUKEE WAY
ELEVATION = 19.18
(BASED ON 1983-2001 TIDAL EPOCH)

SITE DATA

TAX PARCEL NOS. 6965000410, 6965000411, 6965000423
AREA: 18.6± ACRES

NOTES

1. EQUIPMENT USED: TOPCON GS ROBOTIC TOTAL STATION
2. THIS SURVEY WAS PERFORMED BY FIELD TRAVERSE WITH THE FINAL RESULTS MEETING OR EXCEEDING THE CURRENT TRAVERSE STANDARDS CONTAINED IN W.A.C. 332-130-090. ALL MEASUREMENTS WERE MADE WITH A TOPCON GS ROBOTIC TOTAL STATION IN ACCORDANCE WITH THE EQUIPMENT MANUFACTURER'S SPECIFICATIONS.
3. IN ACCORDANCE WITH THE REVISED CODE OF WASHINGTON (R.C.W.) 58.09 AND THE WASHINGTON ADMINISTRATIVE CODE (W.A.C.) 332-130, THIS SURVEY MAY DEPICT OCCUPATIONAL INDICATORS THAT DIFFER FROM THE DEEDED LOT LINES. THESE INDICATORS, IF AT ALL PRESENT, MAY REPRESENT A POTENTIAL FOR CLAIMS OF UNWRITTEN TITLE. THIS SURVEY DOES NOT PURPORT TO RESOLVE SUCH ITEMS.
4. FIELD WORK PERFORMED IN MARCH THROUGH MARCH AND SEPTEMBER 2017, UNDER SITTS & HILL PROJECT NUMBER 17537.
5. UTILITIES AS SHOWN HEREON ARE BASED ON FIELD SURVEY OBSERVATION OF UTILITY LOCATE SERVICES PERFORMED BY MOUNTAIN VIEW LOCATING SERVICES LLC. IN SEPTEMBER 2017 FOR THIS SURVEY. THIS HAS BEEN SUPPLEMENTED BY PUBLIC RECORDS. RECORD UTILITY LINES SHOWN HEREON ARE DEPICTED WITH THE STANDARD LINETYPE WITH A "– R" AS SHOWN IN THE LEGEND. UTILITIES OTHER THAN SHOWN MAY EXIST ON THE SITE. THE SURVEYOR DOES NOT WARRANT THAT THE UNDERGROUND UTILITIES SHOWN ARE IN THE EXACT LOCATION INDICATED. THE SURVEYOR DOES CERTIFY THAT THEY ARE SHOWN AS ACCURATELY AS POSSIBLE FROM FIELD SURVEY AND PAINTED UTILITY LOCATE LINES. COLLECTION AND DEPICTION OF EXISTING SUBSURFACE UTILITY DATA IS CONSISTENT WITH QUALITY LEVEL (B) OF THE ASCE STANDARD GUIDELINES 38-02.
6. SITTS & HILL ENGINEERS, INC. HAS RELIED UPON TITLE INFORMATION NOTED IN COMMITMENT FOR TITLE INSURANCE PREPARED BY FIRST AMERICAN TITLE INSURANCE COMPANY OF WASHINGTON, COMMITMENT NUMBER 2940659, DATED SEPTEMBER 12TH 2017, IN PREPARATION OF THIS SURVEY. SITTS AND HILL ENGINEERS, INC. HAS CONDUCTED NO INDEPENDENT TITLE SEARCH NOR IS SITTS AND HILL ENGINEERS, INC. AWARE OF ANY TITLE ISSUES AFFECTING THE SURVEYED PROPERTY OTHER THAN THOSE SHOWN ON THE MAP AND/OR DISCLOSED BY SAID TITLE COMPANY'S ORDER. SITTS & HILL ENGINEERS, INC. HAS RELIED WHOLLY ON SAID TITLE COMPANY'S REPORT AND THEREFORE QUALIFIES THE MAP'S ACCURACY AND COMPLETENESS TO THAT EXTENT.

SCHEDULE B EXCEPTIONS

PER FIRST AMERICAN TITLE INSURANCE COMPANY OF WASHINGTON, COMMITMENT NUMBER 2940659.
DATED SEPTEMBER 12TH 2017

EXCEPTION NUMBER	AFN	DESCRIPTION
1.	*8012010130	FACILITY CHARGES, IF ANY, INCLUDING BUT NOT LIMITED TO HOOK-UP, OR CONNECTION CHARGES AND LATECOMER CHARGES FOR SEWER, WATER AND PUBLIC FACILITIES OF THE CITY OF TACOMA AS DISCLOSED BY INSTRUMENT RECORDED UNDER RECORDING NO. 2864551 AND AS AMENDED BY INSTRUMENTS RECORDED UNDER RECORDING NUMBERS 2881434 AND 8012010130.
2.	**--	PROVISIONS AND CONDITIONS OF TITLE 53 RCW RELATING TO THE USE OF LANDS WITHIN PORT DISTRICTS, CHAPTER 73, SESSION LAWS 1955, AS AMENDED, OR IF APPLICABLE, CHAPTER 45, SESSION LAWS 1939, AS AMENDED.
3.	2526942	COVENANT FOR CONSTRUCTION OF SANITARY SEWERS IN THE PORT INDUSTRIAL AREA, CITY OF TACOMA; MULTIPLE LOCATIONS INCLUDED IN DOCUMENT; LIES WITHIN THE RIGHTS OF WAY OF THORNE ROAD AND PORT OF TACOMA ROAD.
4.	2781220	DEED FOR PIPELINE GRANTED TO US OIL; 60' WIDE STRIP OF LAND OVER BLOCK 13 OF PORT OF TACOMA INDUSTRIAL DEVELOPMENT DISTRICT FIRST ADDITION; LOCATED WITHIN THE SOUTH RIGHT OF WAY OF THE UNNAMED ROAD ON SAID PLAT BETWEEN BLOCKS 12 AND 14; EXTENTS OF DEEDED AREA LIES SOUTHEAST OF THE SUBJECT SITE.
5.	*9408020435	DECLARATION OF RESTRICTIVE COVENANT FOR REMEDIAL ACTION OF INDUSTRIAL SOIL CLEAN UP; AFFECTS THE ENTIRE SITE AND NOTES A CAP SYSTEM WITH MONITORING

* BLANKET IN NATURE OF AFFECTS ENTIRE PROPERTY
** INDICATES TITLE EXCEPTION WHICH CANNOT BE SHOWN HEREON DUE TO INSUFFICIENT LEGAL DESCRIPTION OR LACK OF OBSERVABLE PHYSICAL EVIDENCE.

REFERENCES

1. PORT OF TACOMA SURVEY CONTROL MAP; DATED 2016
2. CITY OF TACOMA HISTORIC QUARTER SECTION MAP
3. PIERCE COUNTY QUARTER SECTION MAP
4. CORRECTED PLAT OF PORT OF TACOMA INDUSTRIAL DEVELOPMENT DISTRICT FIRST ADDITION; VOL. 18, PG. 8 BOOK OF RECORDS

LEGAL DESCRIPTIONS

PER FIRST AMERICAN TITLE INSURANCE COMPANY COMMITMENT 2940659; DATED 09/12/2017

PARCEL A (696500-0410):

LOT 1, BLOCK 12, CORRECTED PLAT OF PORT OF TACOMA INDUSTRIAL DEVELOPMENT DISTRICT FIRST ADDITION, ACCORDING TO THE PLAT THEREOF RECORDED IN VOLUME 18 OF PLATS, PAGES 8 AND 8A, RECORDS OF THE PIERCE COUNTY AUDITOR;

TOGETHER WITH THAT PORTION OF THE VACATED RIGHT OF WAY ABUTTING THEREON AND ATTACHED THERETO BY OPERATION OF LAW, AS VACATED BY CITY OF TACOMA ORDINANCE NO. 21116 AND RECORDED UNDER RECORDING NUMBER 2772670;

EXCEPT THAT PORTION LYING WITHIN THE NORTHWESTERLY 200 FEET OF SAID LOT 1;

TOGETHER WITH ALL OF LOTS 2 THROUGH 18, INCLUSIVE, OF SAID BLOCK 12;

SITUATE IN THE CITY OF TACOMA, COUNTY OF PIERCE, STATE OF WASHINGTON.

PARCEL B (696500-0411):

THE NORTHWESTERLY 200 FEET OF LOT 1, BLOCK 12, CORRECTED PLAT OF PORT OF TACOMA INDUSTRIAL DEVELOPMENT DISTRICT FIRST ADDITION, ACCORDING TO THE PLAT THEREOF RECORDED IN VOLUME 18 OF PLATS, PAGES 8 AND 8A, RECORDS OF THE PIERCE COUNTY AUDITOR, MORE PARTICULARLY DESCRIBED AS FOLLOWS:

BEGINNING AT THE INTERSECTION OF THE NORTHERLY CORNER OF SAID LOT 1 AND THE SOUTHWESTERLY RIGHT OF WAY LINE OF PORT OF TACOMA ROAD, BEING THE TRUE POINT OF BEGINNING OF THIS DESCRIPTION;
THENCE SOUTHWESTERLY ALONG THE NORTHWESTERLY LINE OF SAID LOT TO THE WESTERLY CORNER THEREOF;
THENCE SOUTHEASTERLY ALONG THE SOUTHWESTERLY LINE OF SAID LOT A DISTANCE OF 200 FEET;
THENCE ON AN ANGLE TO THE LEFT OF 90° AND PARALLEL TO THE NORTHWESTERLY LINE OF SAID LOT TO INTERSECT THE NORTHEASTERLY SIDE OF SAID LOT;
THENCE ALONG THE NORTHEASTERLY LINE OF SAID LOT TO THE TRUE POINT OF BEGINNING;

SITUATE IN THE CITY OF TACOMA, COUNTY OF PIERCE, STATE OF WASHINGTON.

PARCEL C: (696500-0423)

THAT PORTION OF BLOCK 13, CORRECTED PLAT OF PORT OF TACOMA INDUSTRIAL DEVELOPMENT DISTRICT FIRST ADDITION, ACCORDING TO THE PLAT THEREOF RECORDED IN VOLUME 18 OF PLATS, PAGES 8 AND 8A, RECORDS OF THE PIERCE COUNTY AUDITOR, LYING NORTHERLY OF THE PROLONGATION OF THE NORTHWESTERLY BOUNDARY LINE OF LOTS 2 THROUGH 18, BLOCK 14 OF SAID PLAT;

TOGETHER WITH THAT PORTION OF THE VACATED RIGHT OF WAY ABUTTING THEREON AND ATTACHED THERETO BY OPERATION OF LAW, AS VACATED BY CITY OF TACOMA ORDINANCE NO. 21116 AND RECORDED UNDER RECORDING NUMBER 2772670;

EXCEPT THAT PORTION THEREOF CONVEYED TO THE CITY OF TACOMA BY WARRANTY DEED RECORDED NOVEMBER 28, 1977 UNDER RECORDING NUMBER 2781220;

SITUATE IN THE CITY OF TACOMA, COUNTY OF PIERCE, STATE OF WASHINGTON.

Port of Tacoma
FKA BELL'S OF TACOMA, INC. & PORT OF TACOMA, INC. (CESSION 1941)

MARK:	REVISION:	BY:	APPR:	DATE:

SITTS & HILL ENGINEERS, INC.
CIVIL • STRUCTURAL • SURVEYING
911 EASTERN AVENUE | TACOMA, WA 98421
PHONE: (253) 383-2944 | FAX: (253) 383-2572

STATE OF WASHINGTON
TOBY L. MCBRIDE
CERTIFICATE NUMBER 20150001
REGISTERED PROFESSIONAL LAND SURVEYOR
PRELIMINARY

APPROVED:
M.A.M. 00/00/00
CHECKED BY DATE
DIRECTOR ENG. DATE
PROJ. ENGR DATE
PRINTED BY: schillingd Oct 20, 2017
PORT ADDRESS: ONE SITCUM PLAZA
TACOMA, WA 98401-1837

PARCEL F
TOPOGRAPHIC SURVEY

SV1.0
SH 1 OF 9

CONT/CONS:	TOWNSHIP: 21 NORTH	RANGE: 3 EAST	SECTION: 34
M. ID:	DAT-HRZ: WA83/2011-SF	VERT: MLLW 19.18' @ Tide 22 1933	
PHASE:	PARCEL: N/A	DRAWING SCALE: AS NOTED	

THIS DRAWING IS THE PROPERTY OF THE PORT OF TACOMA AND SHALL NOT BE USED ON OTHER WORK, DISCLOSED, COPIED, IN WHOLE OR IN PART, WITHOUT WRITTEN PERMISSION

BINDING EDGE

PORT OF TACOMA FILE: P:\17500\17537\Drawings\17537 - Topo SV1.0

BINDING EDGE

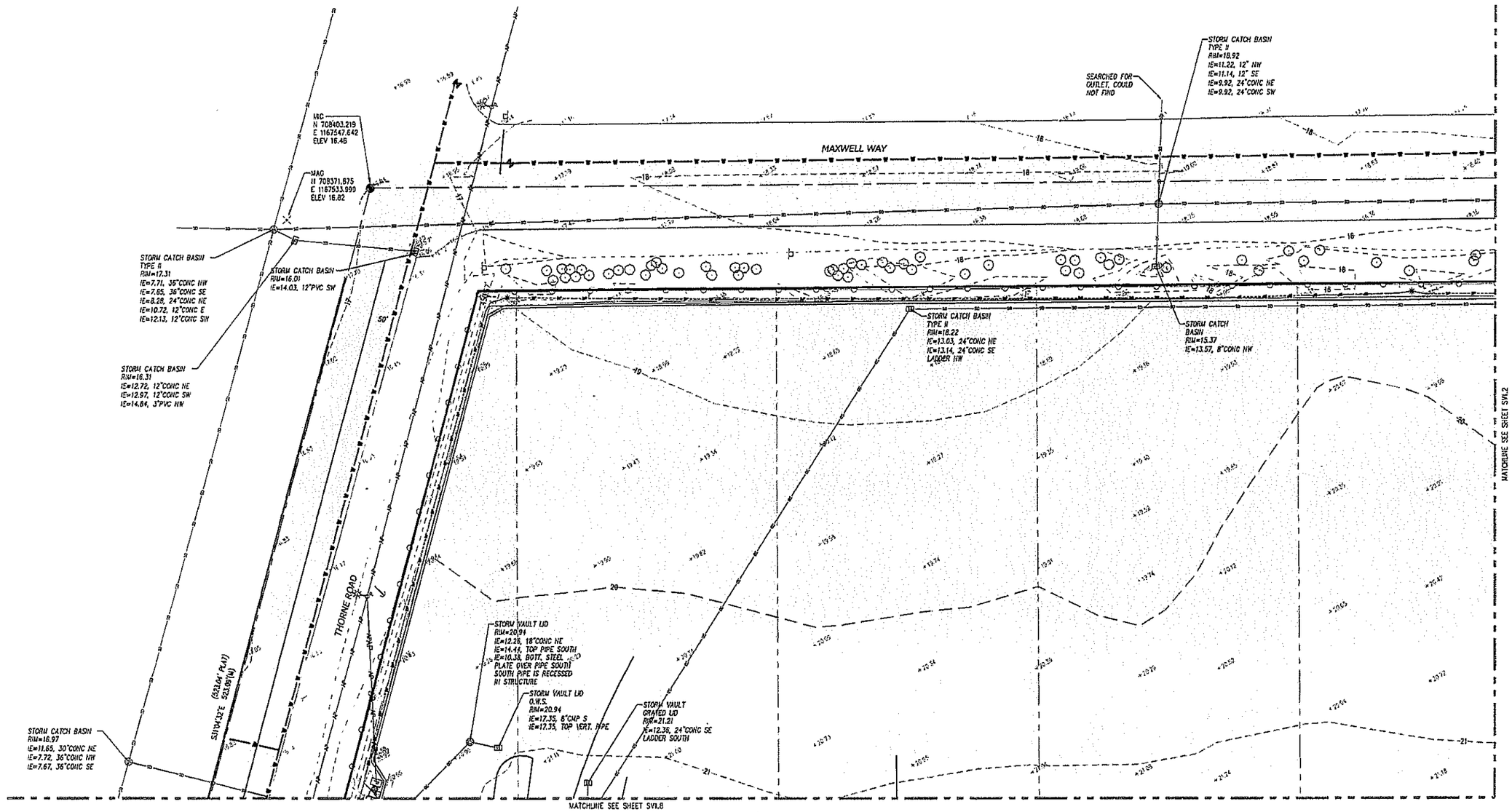

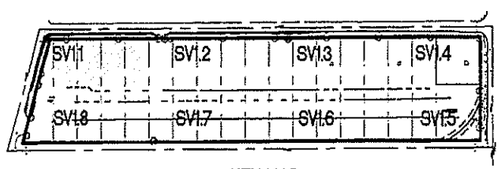

KEY MAP
SCALE 1"=300'

HORIZONTAL SCALE: 1"=20'
20 0 20 40

LEGEND

- FOUND MONUMENT, 2" BRASS DISK W/"X" STAMPED "IPW 36486" UNLESS OTHERWISE NOTED
- SET REBAR W/ CONTROL CAP
- SURVEY CONTROL POINT
- SANITARY SEWER MANHOLE
- UTILITY CLEAN OUT
- STORM MANHOLE
- STORM CATCH BASIN
- STORM CULVERT
- ROOF DRAIN
- WATER MANHOLE
- WATER VALVE
- WATER METER
- FIRE HYDRANT
- WATER VAULT
- FIRE DEPARTMENT CONNECTION
- WATER BLOW OFF
- POST INDICATOR VALVE
- IRRIGATION CONTROL VALVE
- GAS VALVE
- GAS METER
- POWER METER
- POWER CABINET
- UTILITY POLE
- GUY ANCHOR
- JUNCTION BOX
- POWER VAULT
- POWER TRANSFORMER
- POWER MANHOLE
- LIGHT POLE
- TRAFFIC LOOP
- UTILITY VAULT
- UTILITY MANHOLE
- COLUMN
- BOLLARD
- UTILITY POLE
- SIGN
- MAILBOX
- MONITORING WELL
- TPN TAX PARCEL NUMBER
- TELECOM VAULT
- TELECOM MANHOLE
- TELECOM CABINET
- SCHED. B EXCEPTION NUMBER
- ASPHALT SURFACE
- CONCRETE SURFACE
- RIP-RAP SURFACE
- SD — STORM DRAIN LINE
- SD-R — RECORD STORM LINE
- SS — SANITARY SEWER LINE
- SS-R — RECORD SANITARY LINE
- W — BURIED WATER LINE
- W-R — RECORD WATER LINE
- GAS — BURIED GAS LINE
- GAS-R — RECORD GAS LINE
- P — BURIED POWER LINE
- P-R — RECORD BURIED POWER
- AT — BURIED TELECOM LINE
- AT-R — RECORD TELECOM LINE
- AP — OVERHEAD POWER LINE
- CHAIN LINK FENCE
- WOOD OR SPLIT RAIL FENCE
- RAILROAD TRACKS

SEE SHEET SV1.0 FOR SURVEY CONTROL, NOTES AND BOUNDARY INFORMATION

Port of Tacoma
P.O. BOX 1837 TACOMA, WA 98401 253.383.5841

SITTS & HILL ENGINEERS, INC.
CIVIL • STRUCTURAL • SURVEYING
253.572.9310 PHONE
253.572.9311 FAX
2102 PACIFIC AVENUE
TACOMA, WASHINGTON 98402

MARK:	REVISION:	BY:	APPR:	DATE:

PRELIMINARY
NOT FOR CONSTRUCTION
JONATHAN A. MCGUILL
STATE OF WASHINGTON
REGISTERED PROFESSIONAL LAND SURVEYOR

APPROVED:

M.A.M. 00/00/00
CHECKED BY DATE

DIRECTOR ENG. DATE | PROJ. ENGR DATE

PRINTED BY: schillingd Oct 20, 2017
PORT ADDRESS: ONE SITCUM PLAZA
TACOMA, WA 98401-1837

PARCEL F
TOPOGRAPHIC SURVEY

SV1.1
SH 2 OF 9

CONT/CONS:	TOWNSHIP: 21 NORTH	RANGE: 3 EAST	SECTION: 34
M. ID:	DAT-HRZ: WGS3/2011-SF	VERT: MLLW 19.18' @ Tide 22 1933	
PHASE:	PARCEL: N/A	DRAWING SCALE: AS NOTED	

THIS DRAWING IS THE PROPERTY OF THE PORT OF TACOMA AND SHALL NOT BE USED ON OTHER WORK, DISCLOSED, COPIED, IN WHOLE OR IN PART, WITHOUT WRITTEN PERMISSION

PORT OF TACOMA FILE: P:\17500\17537\Drawings\17537 - Topo SV1.1

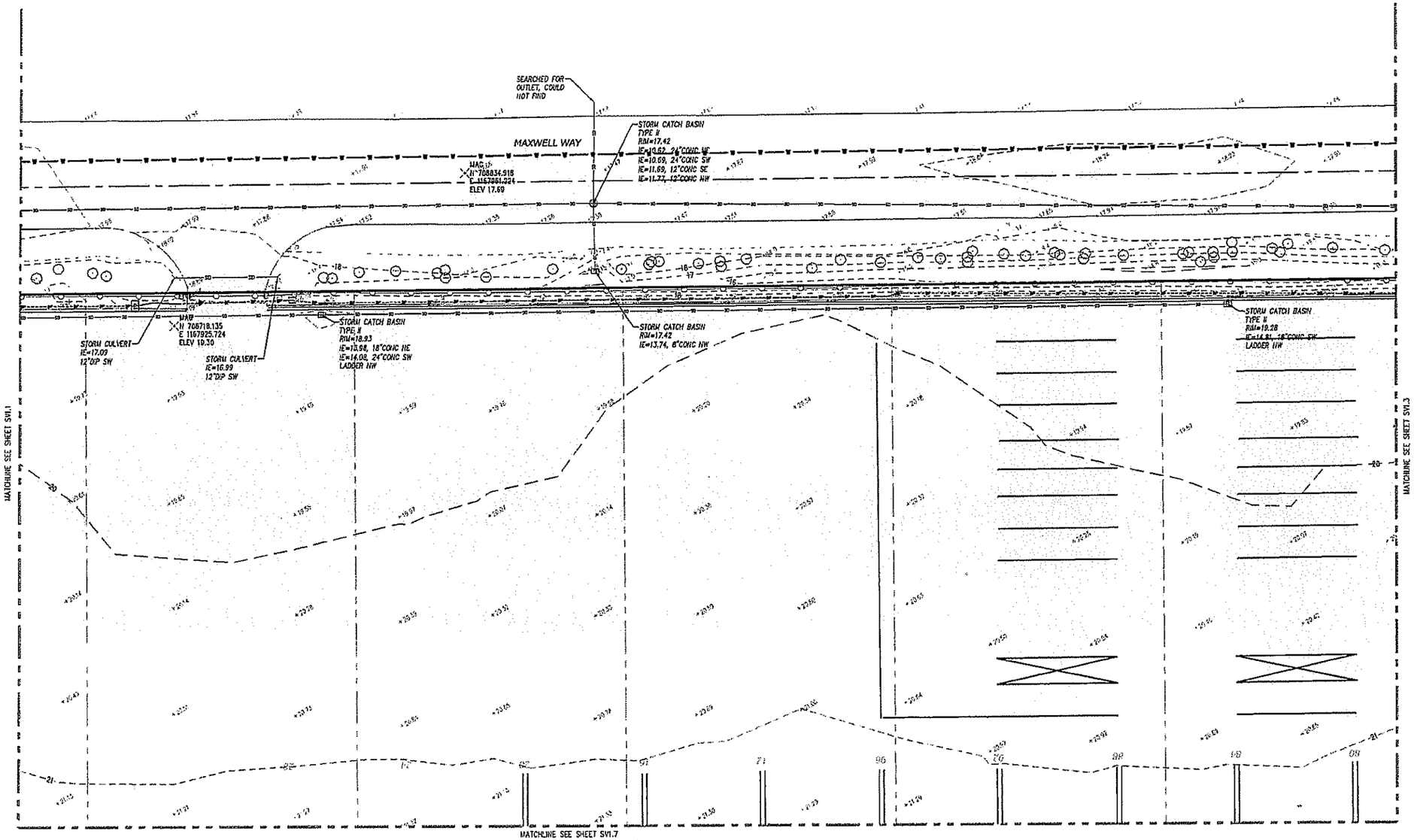

HORIZONTAL SCALE: 1"=20'
20 0 20 40

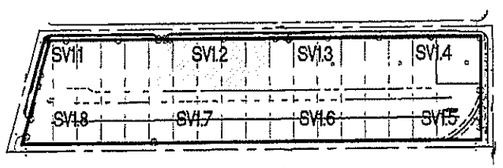

KEY MAP
SCALE 1"=300'

SEE SHEET SV1.0 FOR SURVEY CONTROL, NOTES AND BOUNDARY INFORMATION

LEGEND

- FOUND MONUMENT, 2" BRASS DISK W/"X" STAMPED "IPW 38466" UNLESS OTHERWISE NOTED
- SET REBAR W/ CONTROL CAP
- SURVEY CONTROL POINT
- SANITARY SEWER MANHOLE
- UTILITY CLEAN OUT
- STORM MANHOLE
- STORM CATCH BASIN
- STORM CULVERT
- ROOF DRAIN
- WATER MANHOLE
- WATER VALVE
- WATER METER
- FIRE HYDRANT
- WATER VAULT
- FIRE DEPARTMENT CONNECTION
- WATER BLOW OFF
- POST INDICATOR VALVE
- IRRIGATION CONTROL VALVE
- GAS VALVE
- GAS METER
- POWER METER
- POWER CABINET
- UTILITY POLE
- GUY ANCHOR
- JUNCTION BOX
- POWER VAULT
- POWER TRANSFORMER
- POWER MANHOLE
- LIGHT POLE
- TRAFFIC LOOP
- UTILITY VAULT
- UTILITY MANHOLE
- COLUMN
- BOLLARD
- UTILITY POLE
- SIGN
- MAILBOX
- MONITORING WELL
- TPN TAX PARCEL NUMBER
- TELECOM VAULT
- TELECOM MANHOLE
- TELECOM CABINET
- SCHED. B EXCEPTION NUMBER
- ASPHALT SURFACE
- CONCRETE SURFACE
- RIP-RAP SURFACE
- STORM DRAIN LINE
- RECORD STORM LINE
- SANITARY SEWER LINE
- RECORD SANITARY LINE
- BURIED WATER LINE
- RECORD WATER LINE
- BURIED GAS LINE
- RECORD GAS LINE
- BURIED POWER LINE
- RECORD BURIED POWER
- BURIED TELECOM LINE
- RECORD TELECOM LINE
- OVERHEAD POWER LINE
- CHAIN LINK FENCE
- WOOD OR SPLIT RAIL FENCE
- RAILROAD TRACKS

Port of Tacoma
P.O. Box 1837 Tacoma, WA 98401 (253) 383-5841

SITTS & HILL ENGINEERS, INC.
CIVIL • STRUCTURAL • SURVEYING
411 COURTS STREET | TACOMA, WA 98402
PHONE: (253) 627-2586 | FAX: (253) 627-2587
http://www.sitts-hill.com/contact/

MARK:	REVISION:	BY:	APPR:	DATE:

CHRISTOPHER A. MCSWILLEN
STATE OF WASHINGTON
REGISTERED PROFESSIONAL LAND SURVEYOR
PRELIMINARY

APPROVED:

M.A.M. 00/00/00
CHECKED BY DATE

DIRECTOR ENG. DATE | PROJ. ENGR DATE
PRINTED BY: schillingd Oct 20, 2017
PORT ADDRESS: ONE SITCUM PLAZA
TACOMA, WA 98401-1837

PARCEL F
TOPOGRAPHIC SURVEY

SV1.2
SH 3 OF 9

CONT/CONS:	TOWNSHIP: 21 NORTH	RANGE: 3 EAST	SECTION: 34
M. ID:	DAT-HRZ: WA83/2011-SF	VERT: MLLW 19.18' @ Tide 22 1933	
PHASE:	PARCEL: N/A	DRAWING SCALE: AS NOTED	

THIS DRAWING IS THE PROPERTY OF THE PORT OF TACOMA AND SHALL NOT BE USED ON OTHER WORK, DISCLOSED, COPIED, IN WHOLE OR IN PART, WITHOUT WRITTEN PERMISSION

BINDING EDGE

PORT OF TACOMA FILE: P:\17500\17537\Drawings\17537 - Topo SV1.2

BINDING EDGE

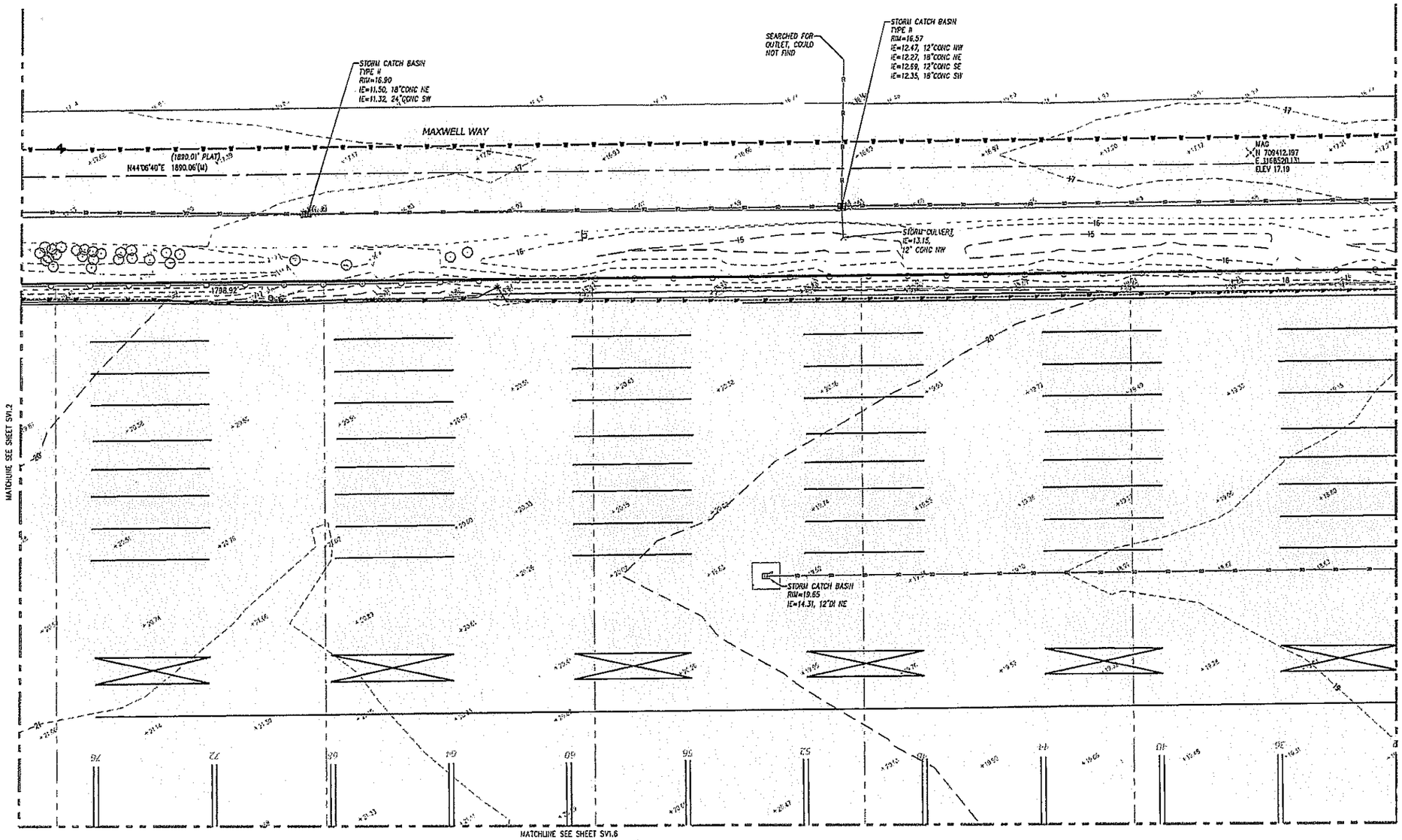

HORIZONTAL SCALE: 1"=20'
20 0 20 40

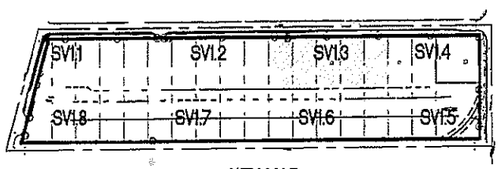

KEY MAP
SCALE 1"=300'

SEE SHEET SV1.0 FOR SURVEY CONTROL, NOTES AND BOUNDARY INFORMATION

LEGEND

- FOUND MONUMENT, 2" BRASS DISK W/"X" STAMPED "PW 38486" UNLESS OTHERWISE NOTED
- SET REBAR W/ CONTROL CAP
- SURVEY CONTROL POINT
- SANITARY SEWER MANHOLE
- UTILITY CLEAN OUT
- STORM MANHOLE
- STORM CATCH BASIN
- STORM CULVERT
- ROOF DRAIN
- WATER MANHOLE
- WATER VALVE
- WATER METER
- FIRE HYDRANT
- WATER VAULT
- FIRE DEPARTMENT CONNECTION
- WATER BLOW OFF
- POST INDICATOR VALVE
- IRRIGATION CONTROL VALVE
- GAS VALVE
- GAS METER
- POWER METER
- POWER CABINET
- UTILITY POLE
- GUY ANCHOR
- JUNCTION BOX
- POWER VAULT
- POWER TRANSFORMER
- POWER MANHOLE
- LIGHT POLE
- TRAFFIC LOOP
- UTILITY VAULT
- UTILITY MANHOLE
- COLUMN
- BOLLARD
- UTILITY POLE
- SIGN
- MAILBOX
- MONITORING WELL
- TPN TAX PARCEL NUMBER
- TELECOM VAULT
- TELECOM MANHOLE
- TELECOM CABINET
- SCHED. B EXCEPTION NUMBER
- ASPHALT SURFACE
- CONCRETE SURFACE
- RIP-RAP SURFACE
- STORM DRAIN LINE
- RECORD STORM LINE
- SANITARY SEWER LINE
- RECORD SANITARY LINE
- BURIED WATER LINE
- RECORD WATER LINE
- BURIED GAS LINE
- RECORD GAS LINE
- BURIED POWER LINE
- RECORD BURIED POWER
- BURIED TELECOM LINE
- RECORD TELECOM LINE
- OVERHEAD POWER LINE
- CHAIN LINK FENCE
- WOOD OR SPLIT RAIL FENCE
- RAILROAD TRACKS

Port of Tacoma
P.O. BOX 1837 TACOMA, WA 98401 (253)383-5841

SITTS & HILL ENGINEERS, INC.
CIVIL • STRUCTURAL • SURVEYING
615 COPELAND STREET | TACOMA, WA. 98402
PHONE: (253) 627-2586 | FAX: (253) 627-2586
http://www.sitts-hill.com

MARK:	REVISION:	BY:	APPR:	DATE:

MICHAEL A. MCSWILLIAM
STATE OF WASHINGTON
REGISTERED PROFESSIONAL LAND SURVEYOR
REGISTRATION NUMBER 38486

APPROVED:

M.A.M. 00/00/00
CHECKED BY DATE

DIRECTOR ENG. DATE | PROJ. ENGR. DATE
PRINTED BY: schillingd Oct 20, 2017
PORT ADDRESS: ONE SITCUM PLAZA
TACOMA, WA 98401-1837

PARCEL F
TOPOGRAPHIC SURVEY

SV1.3
SH 4 OF 9

CONT/CONS:	TOWNSHIP: 21 NORTH	RANGE: 3 EAST	SECTION: 34
M. ID:	DAT-HRZ: WA83/2011-SF	VERT: MLLW 19.18' @ Tide 22 1933	
PHASE:	PARCEL: N/A	DRAWING SCALE: AS NOTED	

THIS DRAWING IS THE PROPERTY OF THE PORT OF TACOMA AND SHALL NOT BE USED ON OTHER WORK, DISCLOSED, COPIED, IN WHOLE OR IN PART, WITHOUT WRITTEN PERMISSION

PORT OF TACOMA FILE: P:\175001\175370\Drawings\175370 - Topo SV1.3

BINDING EDGE

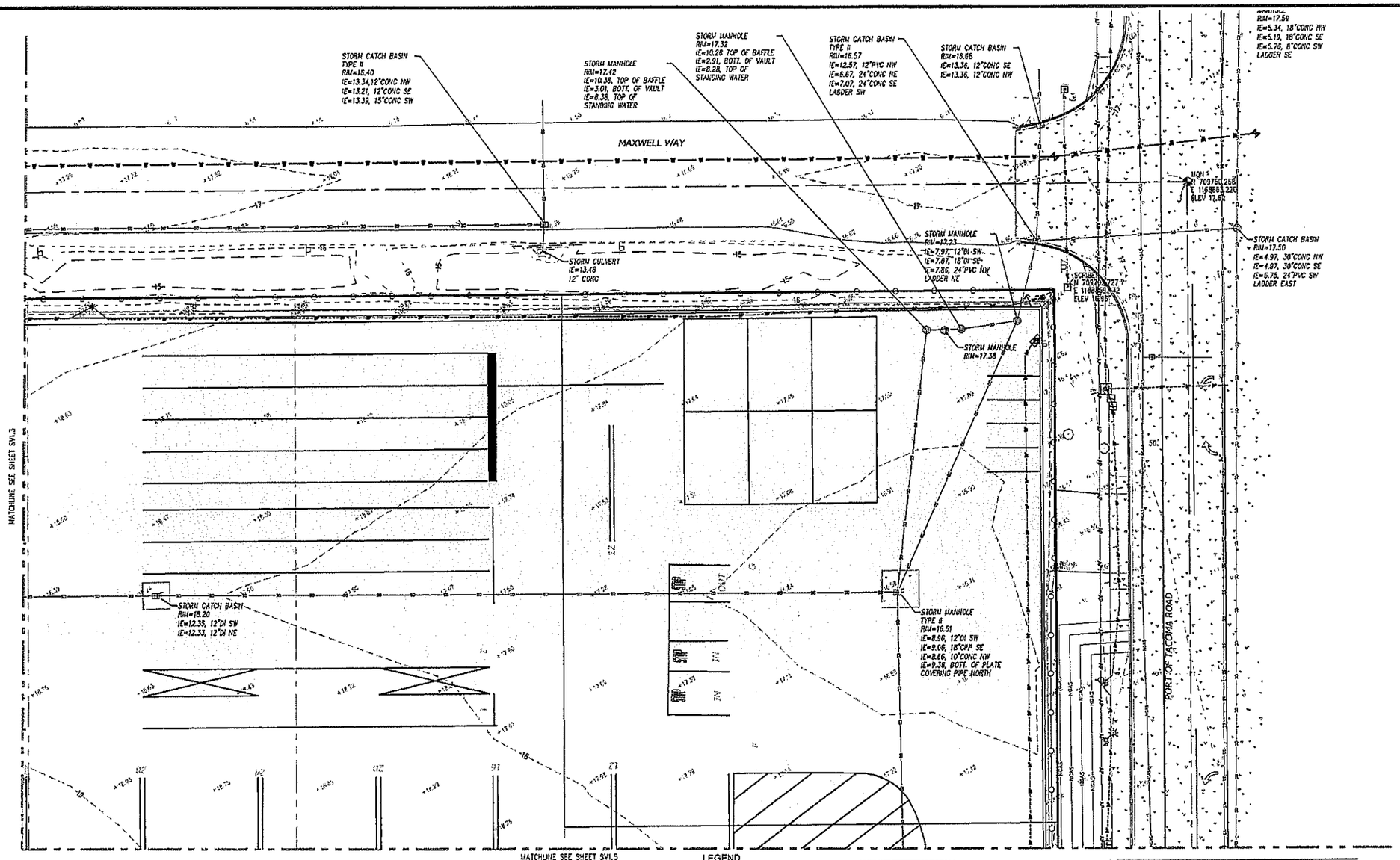

HORIZONTAL SCALE: 1"=20'
20 0 20 40

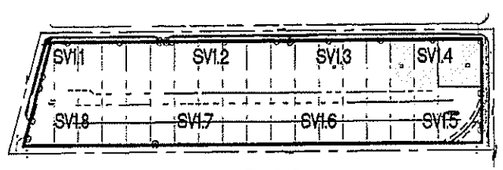

KEY MAP
SCALE 1"=300'

SEE SHEET SV1.0 FOR SURVEY CONTROL, NOTES AND BOUNDARY INFORMATION

LEGEND

- FOUND MONUMENT, 2" BRASS DISK W/"X" STAMPED "TPN 39486" UNLESS OTHERWISE NOTED
- SET REBAR W/ CONTROL CAP
- SURVEY CONTROL POINT
- SANITARY SEWER MANHOLE
- UTILITY CLEAN OUT
- STORM MANHOLE
- STORM CATCH BASIN
- STORM CULVERT
- ROOF DRAIN
- WATER MANHOLE
- WATER VALVE
- WATER METER
- FIRE HYDRANT
- WATER VAULT
- FIRE DEPARTMENT CONNECTION
- WATER BLOW OFF
- POST INDICATOR VALVE
- IRRIGATION CONTROL VALVE
- GAS VALVE
- GAS METER
- POWER METER
- POWER CABINET
- UTILITY POLE
- GUY ANCHOR
- JUNCTION BOX
- POWER VAULT
- POWER TRANSFORMER
- POWER MANHOLE
- LIGHT POLE
- TRAFFIC LOOP
- UTILITY VAULT
- UTILITY MANHOLE
- COLUMN
- BOLLARD
- UTILITY POLE
- SIGN
- MAILBOX
- MONITORING WELL
- TPN TAX PARCEL NUMBER
- TELECOM VAULT
- TELECOM MANHOLE
- TELECOM CABINET
- SCHED. B EXCEPTION NUMBER
- ASPHALT SURFACE
- CONCRETE SURFACE
- RIP-RAP SURFACE
- STORM DRAIN LINE
- RECORD STORM LINE
- SANITARY SEWER LINE
- RECORD SANITARY LINE
- BURIED WATER LINE
- RECORD WATER LINE
- BURIED GAS LINE
- RECORD GAS LINE
- BURIED POWER LINE
- RECORD BURIED POWER
- BURIED TELECOM LINE
- RECORD TELECOM LINE
- OVERHEAD POWER LINE
- CHAIN LINK FENCE
- WOOD OR SPLIT RAIL FENCE
- RAILROAD TRACKS

Port of Tacoma
P.O. BOX 1837 TACOMA, WA 98401 (253)383-5841

SITTS & HILL ENGINEERS, INC.
CIVIL • STRUCTURAL • SURVEYING
411 PUYALLUP STREET | FAX 253.841.9588
PUYALLUP, WA 98371 | FAX 253.841.9115
www.sittsandhill.com

MARK:	REVISION:	BY:	APPR:	DATE:

THIS DRAWING IS THE PROPERTY OF THE PORT OF TACOMA AND SHALL NOT BE USED ON OTHER WORK, DISCLOSED, COPIED, IN WHOLE OR IN PART, WITHOUT WRITTEN PERMISSION

PARCEL F
TOPOGRAPHIC SURVEY

APPROVED:

DIRECTOR ENG. DATE

M.A.M. 00/00/00
CHECKED BY DATE

PROJ. ENGR DATE

PRINTED BY: schillingd Oct 20, 2017
PORT ADDRESS: ONE SITCUM PLAZA
TACOMA, WA 98401-1837

TOWNSHIP: 21 NORTH | RANGE: 3 EAST | SECTION: 34
DAT-HRZ: WA83/2011-SF | VERT: MLLW 19.18 @ Tide 22 1933
PARCEL: N/A | DRAWING SCALE: AS NOTED

SV1.4
SH 5 OF 9

CONT/CONS:
M. ID:
PHASE:

PORT OF TACOMA FILE: P:\17500\17537\Drawings\17537 - Topo SV1.4

BINDING EDGE

MATCHLINE SEE SHEET SV1.4

MATCHLINE SEE SHEET SV1.6

STORM CATCH BASIN
RIM=18.28
IE=12.18, 18"CPP NE
IE=12.26, 18"CPP S
IE=12.26, 18"CPP SE

MAG
N 709406.916
E 1169000.499
ELEV 16.91

STORM CATCH BASIN
TYPE II
RIM=16.70
IE=10.03, 18"CPP NW
IE=10.05, 12"CIP SW

STORM CULVERT
IE=14.03, 18"CPP
NW

EAST 19TH ST.

PORT OF TACOMA ROAD

(505.00' PLAT)
(495.30' PRORATED CALC)

R=41'

(449.63' PLAT)
449.48' (PRORATED CALC)

S45°33'33"E 954.85'(M)
(955.23' PLAT - CALCULATED)

SANITARY SEWER
MANHOLE
RIM=16.69
IE=4.67, 18"CONC NW
IE=4.59, 18"CONC SE
IE=5.64, 8"CONC SW
LADDER SE

MAG
N 709619.296
E 1169099.345
ELEV 16.95

STORM MANHOLE
RIM=16.45
IE=4.55, 36"CONC NW
IE=4.50, 36"CONC SE
IE=6.50, 12"DIP SW
IE=6.60, 12"DIP NE

STORM CATCH BASIN
RIM=15.94
IE=10.03, 10"CONC SW
IE=9.83, 10"CONC NE

STORM CATCH BASIN
RIM=15.90
IE=12.00, 10"CONC NE
IE=12.01, 10"CONC SW

SANITARY SEWER
MANHOLE
RIM=16.80
IE=3.96, 18"CONC NW
IE=3.91, 18"CONC SE
LADDER SE

HORIZONTAL SCALE: 1"=20'
20 0 20 40

LEGEND

- FOUND MONUMENT, 2" BRASS DISK W/"X" STAMPED "TPW 38486" UNLESS OTHERWISE NOTED
- SET REBAR W/ CONTROL CAP
- SURVEY CONTROL POINT
- SANITARY SEWER MANHOLE
- UTILITY CLEAN OUT
- STORM MANHOLE
- STORM CATCH BASIN
- STORM CULVERT
- ROOF DRAIN
- WATER MANHOLE
- WATER VALVE
- WATER METER
- FIRE HYDRANT
- WATER VAULT
- FIRE DEPARTMENT CONNECTION
- WATER BLOW OFF
- POST INDICATOR VALVE
- IRRIGATION CONTROL VALVE
- GAS VALVE
- GAS METER
- POWER METER
- POWER CABINET
- UTILITY POLE
- GUY ANCHOR
- JUNCTION BOX
- POWER VAULT
- POWER TRANSFORMER
- POWER MANHOLE
- LIGHT POLE
- TRAFFIC LOOP
- UTILITY VAULT
- UTILITY MANHOLE
- COLUMN
- BOLLARD
- UTILITY POLE
- SIGN
- MAILBOX
- MONITORING WELL
- TPN TAX PARCEL NUMBER
- TELECOM VAULT
- TELECOM MANHOLE
- TELECOM CABINET
- SCHED. B EXCEPTION NUMBER
- ASPHALT SURFACE
- CONCRETE SURFACE
- RIP-RAP SURFACE
- SD — STORM DRAIN LINE
- SD-R — RECORD STORM LINE
- SS — SANITARY SEWER LINE
- SS-R — RECORD SANITARY LINE
- W — BURIED WATER LINE
- W-R — RECORD WATER LINE
- NGAS — BURIED GAS LINE
- NGAS-R — RECORD GAS LINE
- BP — BURIED POWER LINE
- BP-R — RECORD BURIED POWER
- BT — BURIED TELECOM LINE
- BT-R — RECORD TELECOM LINE
- AP — OVERHEAD POWER LINE
- CHAIN LINK FENCE
- WOOD OR SPLIT RAIL FENCE
- RAILROAD TRACKS

KEY MAP
SCALE 1"=300'
SV1.1 SV1.2 SV1.3 SV1.4 SV1.5 SV1.6 SV1.7 SV1.8

SEE SHEET SV1.0 FOR SURVEY CONTROL, NOTES AND BOUNDARY INFORMATION

PORT OF TACOMA FILE: P:\1750\117537\Drawings\117537 - Topo SV1.5

Port of Tacoma
P.O. BOX 1837 TACOMA, WA 98401 253.383.5841

SITTS & HILL ENGINEERS, INC.
CIVIL • STRUCTURAL • SURVEYING
417 SOUTH SPIRNET | TACOMA, WA 98405
PHONE (253) 572-3444 | FAX (253) 572-3473

MARK: | REVISION: | BY: | APPR: | DATE:

PRELIMINARY
MICHAEL A. MCGILLIVRAY
STATE OF WASHINGTON
PROFESSIONAL LAND SURVEYOR

APPROVED:

M.A.M. 00/00/00
CHECKED BY DATE

DIRECTOR ENG. DATE | PROJ. ENGR DATE

PRINTED BY: schillingd Oct 20, 2017
PORT ADDRESS: ONE SITCUM PLAZA
TACOMA, WA 98401-1837

PARCEL F
TOPOGRAPHIC SURVEY

SV1.5
SH 6 OF 9

TOWNSHIP: 21 NORTH | RANGE: 3 EAST | SECTION: 34
DAT-HRZ: WGS/2011-SF | VERT: MLLW 19.18' @ Tide 22 1933
DRAWING SCALE: AS NOTED

CONT/CONS:
M. ID:
PHASE:
PARCEL: N/A

THIS DRAWING IS THE PROPERTY OF THE PORT OF TACOMA AND SHALL NOT BE USED ON OTHER WORK, DISCLOSED, COPIED, IN WHOLE OR IN PART, WITHOUT WRITTEN PERMISSION

BINDING EDGE

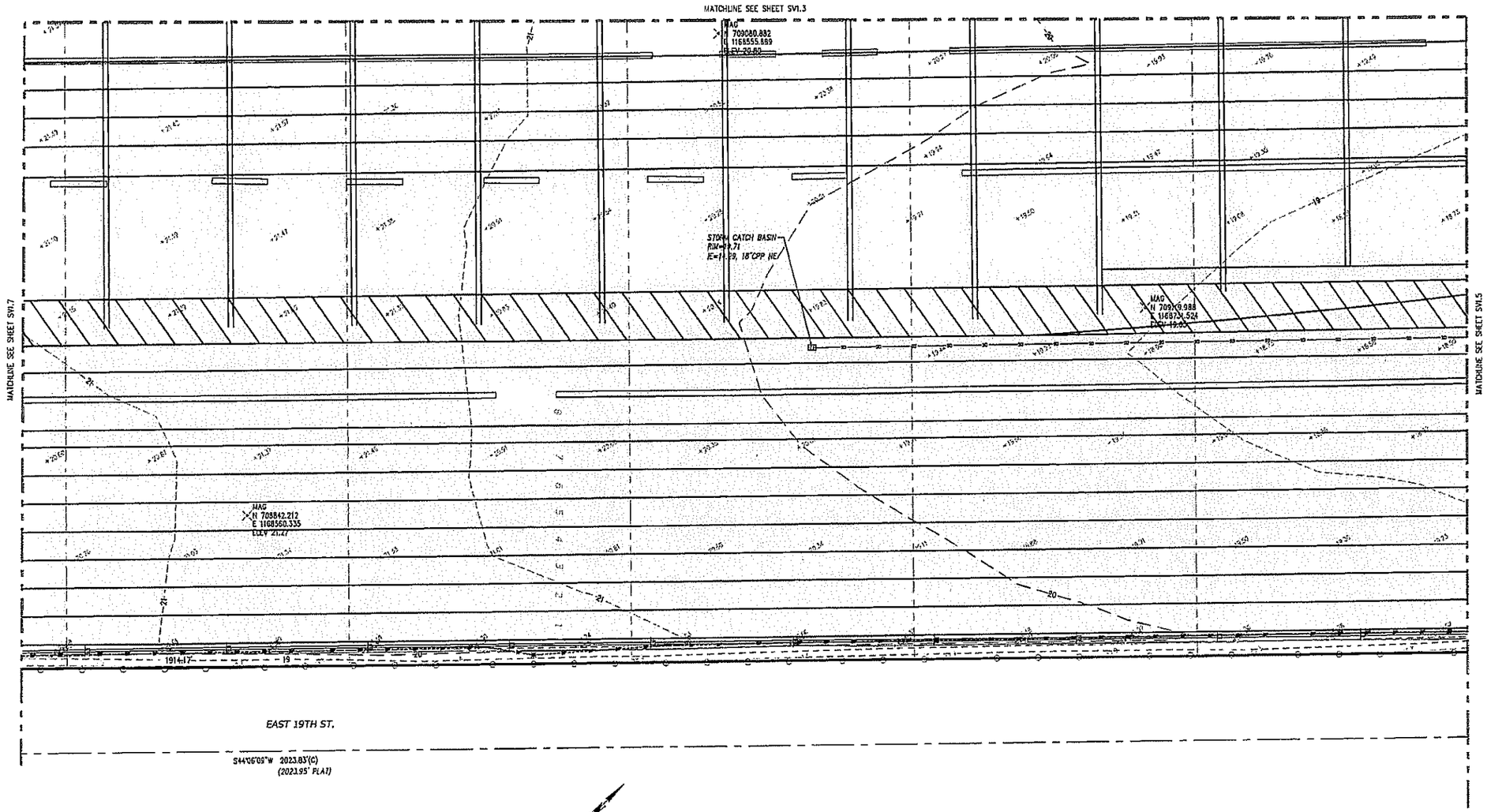

HORIZONTAL SCALE: 1"=20'
20 0 20 40

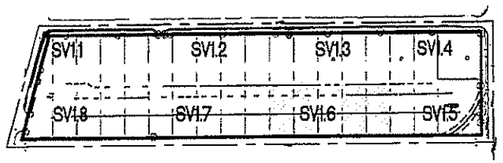

KEY MAP
SCALE 1"=300'

SEE SHEET SV1.0 FOR SURVEY CONTROL, NOTES AND BOUNDARY INFORMATION

LEGEND

- FOUND MONUMENT, 3" BRASS DISK W/"x" STAMPED "TPW 38486" UNLESS OTHERWISE NOTED
- SET REBAR W/ CONTROL CAP
- SURVEY CONTROL POINT
- SANITARY SEWER MANHOLE
- UTILITY CLEAN OUT
- STORM MANHOLE
- STORM CATCH BASIN
- STORM CULVERT
- ROOF DRAIN
- WATER MANHOLE
- WATER VALVE
- WATER METER
- FIRE HYDRANT
- WATER VAULT
- FIRE DEPARTMENT CONNECTION
- WATER BLOW OFF
- POST INDICATOR VALVE
- IRRIGATION CONTROL VALVE
- GAS VALVE
- GAS METER
- POWER METER
- POWER CABINET
- UTILITY POLE
- GUY ANCHOR
- JUNCTION BOX
- POWER VAULT
- POWER TRANSFORMER
- POWER MANHOLE
- LIGHT POLE
- TRAFFIC LOOP
- UTILITY VAULT
- UTILITY MANHOLE
- COLUMN
- BOLLARD
- UTILITY POLE
- SIGN
- MAILBOX
- MONITORING WELL
- TPN TAX PARCEL NUMBER
- TELECOM VAULT
- TELECOM MANHOLE
- TELECOM CABINET
- SCHED. B EXCEPTION NUMBER
- ASPHALT SURFACE
- CONCRETE SURFACE
- RIP-RAP SURFACE
- SD — STORM DRAIN LINE
- SD-R — RECORD STORM LINE
- SS — SANITARY SEWER LINE
- SS-R — RECORD SANITARY LINE
- W — BURIED WATER LINE
- W-R — RECORD WATER LINE
- NGAS — BURIED GAS LINE
- NGAS-R — RECORD GAS LINE
- BP — BURIED POWER LINE
- BP-R — RECORD BURIED POWER
- BT — BURIED TELECOM LINE
- BT-R — RECORD TELECOM LINE
- OP — OVERHEAD POWER LINE
- CHAIN LINK FENCE
- WOOD OR SPLIT RAIL FENCE
- RAILROAD TRACKS

Port of Tacoma
P.O. BOX 1837 TACOMA, WA 98401 (253)383-5841

MARK:	REVISION:	BY:	APPR:	DATE:

SITTS & HILL ENGINEERS, INC.
CIVIL • STRUCTURAL • SURVEYING
101 STEWART STREET | TACOMA, WA 98402
PHONE: (253) 383-2944 | FAX: (253) 383-4818
http://www.sitts-hill.com

STATE OF WASHINGTON
MICHAEL A. MCDEVITT
REGISTERED PROFESSIONAL LAND SURVEYOR
FOR REVIEW ONLY

M.A.M. 00/00/00
CHECKED BY DATE

APPROVED:

DIRECTOR ENG. DATE | PROJ. ENGR DATE

PARCEL F
TOPOGRAPHIC SURVEY

SV1.6
SH 7 OF 9

CONT/CONS:	TOWNSHIP: 21 NORTH	RANGE: 3 EAST	SECTION: 34
M. ID:	DAT-HRZ: WA83/2011-SF	VERT: MLLW 19.18' @ Tide 22 1933	
PHASE:	PARCEL: N/A	DRAWING SCALE: AS NOTED	

PRINTED BY: schilingd Oct 20, 2017
PORT ADDRESS: ONE SITCUM PLAZA
TACOMA, WA 98401-1837

THIS DRAWING IS THE PROPERTY OF THE PORT OF TACOMA AND SHALL NOT BE USED ON OTHER WORK, DISCLOSED, COPIED, IN WHOLE OR IN PART, WITHOUT WRITTEN PERMISSION

PORT OF TACOMA FILE: P:\17500\175371\Drawings\175371 - Topo SV1.6

BINDING EDGE

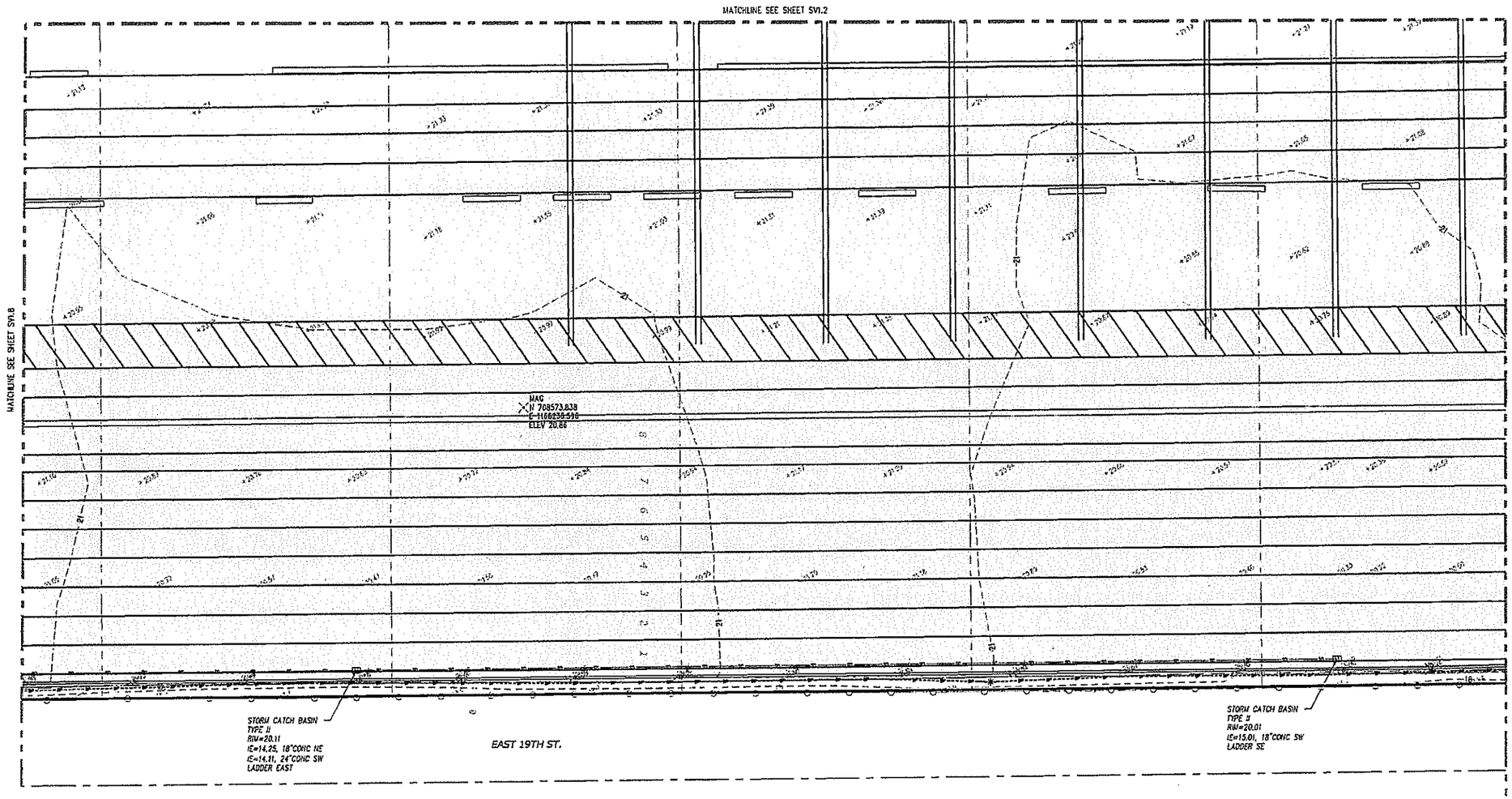

HORIZONTAL SCALE: 1"=20'
20 0 20 40

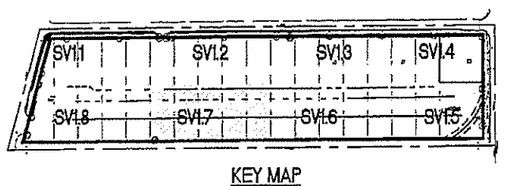

KEY MAP
SCALE 1"=300'

LEGEND

- FOUND MONUMENT, 2" BRASS DISK W/"X" STAMPED "IPW 38486" UNLESS OTHERWISE NOTED
- SET REBAR W/ CONTROL CAP
- SURVEY CONTROL POINT
- SANITARY SEWER MANHOLE
- UTILITY CLEAN OUT
- STORM MANHOLE
- STORM CATCH BASIN
- STORM CULVERT
- ROOF DRAIN
- WATER MANHOLE
- WATER VALVE
- WATER METER
- FIRE HYDRANT
- WATER VAULT
- FIRE DEPARTMENT CONNECTION
- WATER BLOW OFF
- POST INDICATOR VALVE
- IRRIGATION CONTROL VALVE
- GAS VALVE
- GAS METER
- POWER METER
- POWER CABINET
- UTILITY POLE
- GUY ANCHOR
- JUNCTION BOX
- POWER VAULT
- POWER TRANSFORMER
- POWER MANHOLE
- LIGHT POLE
- TRAFFIC LOOP
- UTILITY VAULT
- UTILITY MANHOLE
- COLUMN
- BOLLARD
- UTILITY POLE
- SIGN
- MAILBOX
- MONITORING WELL
- TAX PARCEL NUMBER
- TELECOM VAULT
- TELECOM MANHOLE
- TELECOM CABINET
- SCHED. B EXCEPTION NUMBER
- ASPHALT SURFACE
- CONCRETE SURFACE
- RIP-RAP SURFACE
- STORM DRAIN LINE
- RECORD STORM LINE
- SANITARY SEWER LINE
- RECORD SANITARY LINE
- BURIED WATER LINE
- RECORD WATER LINE
- BURIED GAS LINE
- RECORD GAS LINE
- BURIED POWER LINE
- RECORD BURIED POWER
- BURIED TELECOM LINE
- RECORD TELECOM LINE
- OVERHEAD POWER LINE
- CHAIN LINK FENCE
- WOOD OR SPLIT RAIL FENCE
- RAILROAD TRACKS

SEE SHEET SV1.0 FOR SURVEY CONTROL, NOTES AND BOUNDARY INFORMATION

Port of Tacoma
P.O. BOX 1837 TACOMA, WA 98401

SITTS & HILL ENGINEERS, INC.
CIVIL • STRUCTURAL • SURVEYING
WWW.SITTSHILL.COM

MARK:	REVISION:	BY:	APPR:	DATE:

MICHAEL A. MCSWILLEY
STATE OF WASHINGTON
PROFESSIONAL LAND SURVEYOR
RELEASED FOR CONSTRUCTION
M.A.M. 00/00/00
CHECKED BY DATE

APPROVED:

DIRECTOR, ENG. DATE PROJ. ENGR DATE

PARCEL F
TOPOGRAPHIC SURVEY

SV1.7
SH 8 OF 9

CONT/CONS:	TOWNSHIP: 21 NORTH	RANGE: 3 EAST	SECTION: 34
M. ID:	DAT–HRZ: WGS3/2011–SF	VERT: MLLW 19.18' @ Tide 22 1933	PRINTED BY: schillingd Oct 20, 2017
PHASE:	PARCEL: N/A	DRAWING SCALE: AS NOTED	PORT ADDRESS: ONE SITCUM PLAZA TACOMA, WA 98401–1837

THIS DRAWING IS THE PROPERTY OF THE PORT OF TACOMA AND SHALL NOT BE USED ON OTHER WORK, DISCLOSED, COPIED, IN WHOLE OR IN PART, WITHOUT WRITTEN PERMISSION

PORT OF TACOMA FILE: P:\17500\17537\Drawings\17537 - Topo SV1.7

BINDING EDGE

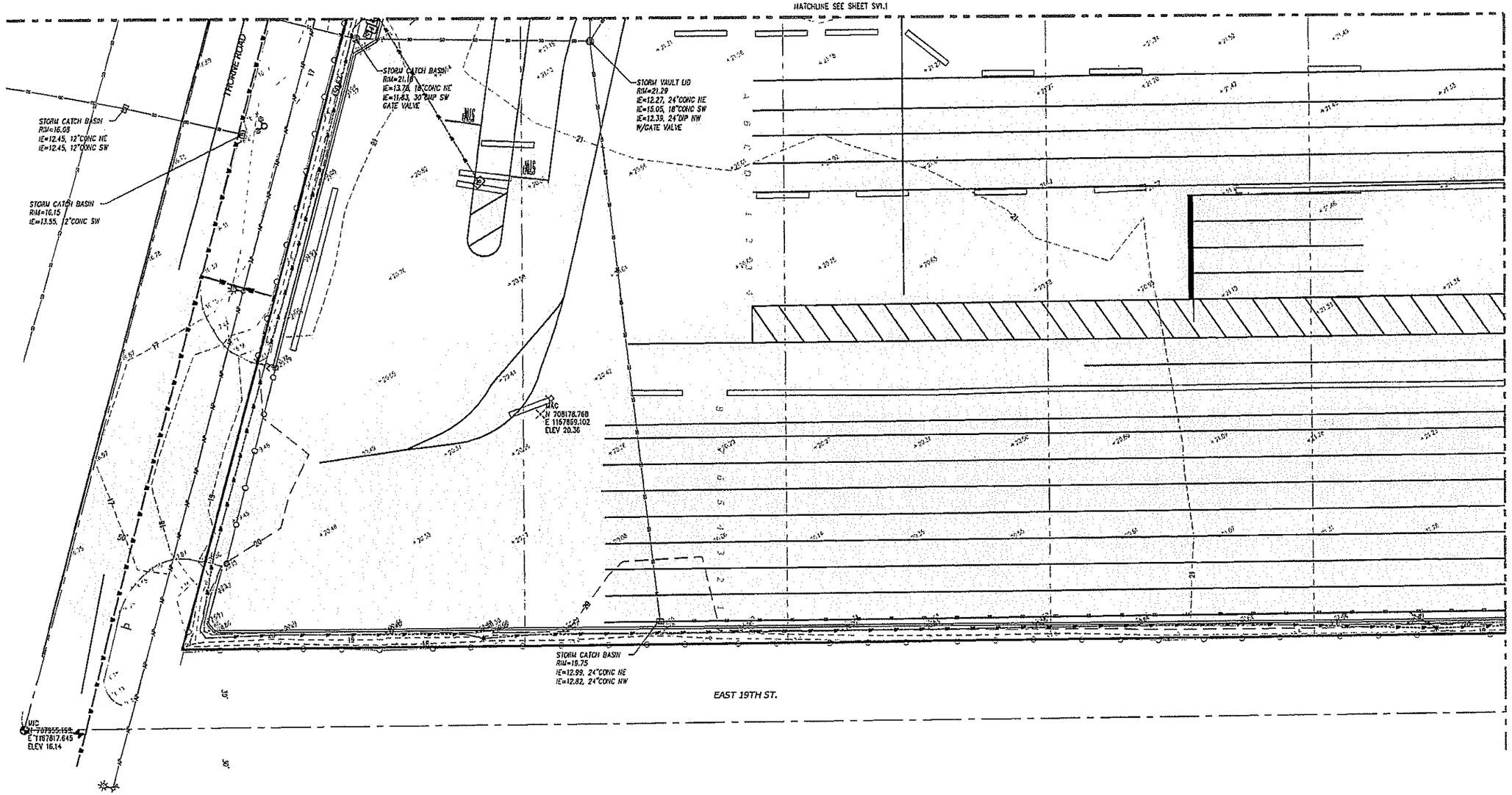

HORIZONTAL SCALE: 1"=20'

20 0 20 40

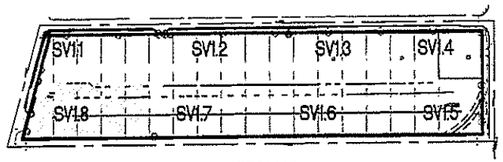

KEY MAP
SCALE 1"=300'

SEE SHEET SV1.0 FOR SURVEY CONTROL, NOTES AND BOUNDARY INFORMATION

LEGEND

- FOUND MONUMENT, 3" BRASS DISK W/"X" STAMPED "TPW 39485" UNLESS OTHERWISE NOTED
- SET REBAR W/ CONTROL CAP
- SURVEY CONTROL POINT
- SANITARY SEWER MANHOLE
- UTILITY CLEAN OUT
- STORM MANHOLE
- STORM CATCH BASIN
- STORM CULVERT
- ROOF DRAIN
- WATER MANHOLE
- WATER VALVE
- WATER METER
- FIRE HYDRANT
- WATER VAULT
- FIRE DEPARTMENT CONNECTION
- WATER BLOW OFF
- POST INDICATOR VALVE
- IRRIGATION CONTROL VALVE
- GAS VALVE
- GAS METER
- POWER METER
- POWER CABINET
- UTILITY POLE
- GUY ANCHOR
- JUNCTION BOX
- POWER VAULT
- POWER TRANSFORMER
- POWER MANHOLE
- LIGHT POLE
- TRAFFIC LOOP
- UTILITY VAULT
- UTILITY MANHOLE
- COLUMN
- BOLLARD
- UTILITY POLE
- SIGN
- MAILBOX
- MONITORING WELL
- TPN TAX PARCEL NUMBER
- TELECOM VAULT
- TELECOM MANHOLE
- TELECOM CABINET
- SCHED. B EXCEPTION NUMBER
- ASPHALT SURFACE
- CONCRETE SURFACE
- RIP-RAP SURFACE
- STORM DRAIN LINE
- RECORD STORM LINE
- SANITARY SEWER LINE
- RECORD SANITARY LINE
- BURIED WATER LINE
- RECORD WATER LINE
- BURIED GAS LINE
- RECORD GAS LINE
- BURIED POWER LINE
- RECORD BURIED POWER
- BURIED TELECOM LINE
- RECORD TELECOM LINE
- OVERHEAD POWER LINE
- CHAIN LINK FENCE
- WOOD OR SPLIT RAIL FENCE
- RAILROAD TRACKS

Port of Tacoma
P.O. BOX 1837 TACOMA, WASHINGTON 98401

SITTS & HILL ENGINEERS, INC.
CIVIL • STRUCTURAL • SURVEYING
811 SOUTH FIFTH STREET | TACOMA, WASHINGTON
PHONE (253) 572-3459 | FAX (253) 572-4086
http://www.sitts_hill.com

MARK:	REVISION:	BY:	APPR:	DATE:

MICHAEL A. MCBRIDE, STATE OF WASHINGTON, REGISTERED PROFESSIONAL LAND SURVEYOR, 38485

PRELIMINARY

APPROVED:

M.A.M. 00/00/00
CHECKED BY DATE

DIRECTOR ENG. DATE PROJ. ENGR DATE
PRINTED BY: schilingd Oct 20, 2017
PORT ADDRESS: ONE SITCUM PLAZA
TACOMA, WA 98401-1837

PARCEL F
TOPOGRAPHIC SURVEY

SV1.8
SH 9 OF 9

CONT/CONS:
M. ID:
PHASE:

TOWNSHIP: 21 NORTH | RANGE: 3 EAST | SECTION: 34
DAT-HRZ: WA83/2011-SF | VERT: MLLW 19.18' @ Tide 22 1933
PARCEL: N/A | DRAWING SCALE: AS NOTED

THIS DRAWING IS THE PROPERTY OF THE PORT OF TACOMA AND SHALL NOT BE USED ON OTHER WORK, DISCLOSED, COPIED, IN WHOLE OR IN PART, WITHOUT WRITTEN PERMISSION

PORT OF TACOMA FILE: P:\17500\17537\Drawings\17537 - Topo SV1.8

BINDING EDGE

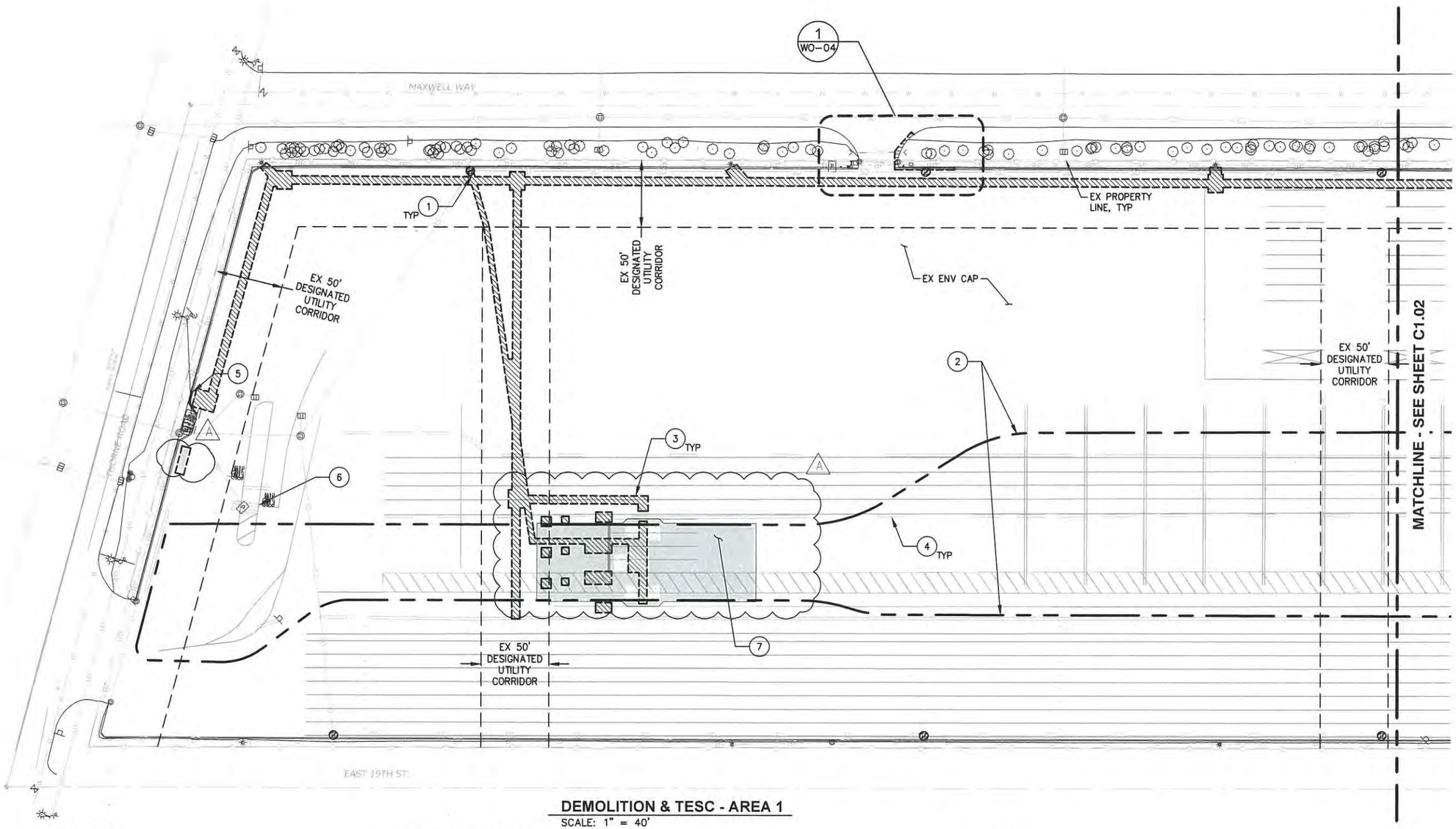

DEMOLITION & TESC - AREA 1

SCALE: 1" = 40'

DEMOLITION/TESC NOTES:

1. SEE ELECTRICAL PLANS FOR ELECTRICAL AND COMMUNICATION DEMOLITION REQUIREMENTS.
2. SEE SHEET C1.03 FOR TESC NOTES.
3. ALL UTILITIES, STRUCTURES, AND SITE FEATURES NOT INDICATED FOR DEMOLITION SHALL BE PROTECTED IN PLACE.
4. SAWCUT AREAS SHOWN DO NOT INCLUDE ALL SAWCUTTING REQUIRED FOR UTILITY WORK. REFER TO THE ELECTRICAL PLANS FOR EXTENT OF BURIED UTILITY WORK. EXTENTS WILL VARY WITH CONTRACTOR MEANS AND METHODS.

CALL 2 DAYS
BEFORE YOU DIG
1-800-424-5555

DEMOLITION/TESC KEY NOTES:

1. PROVIDE DRAINAGE STRUCTURE INSERT, SEE SHEET C1.03 DETAIL 1
2. REMOVE EX PAVEMENT STRIPING WITHIN THE INDICATED IMPROVEMENT AREAS; SEE LIMITS ON SHEET C2.01
3. SAWCUT AND REMOVE EX ACP AT NEW FEATURES; SEE LIMITS ON SHEET C2.01
4. CONTRACTOR SHALL REPOSITION EX BARRIERS DURING PHASES 1 AND 2 TO SEPARATE HUSKY AND WUT QUEUE LANES AND THE CONTRACTOR WORK AREAS. APPROXIMATELY 3,955LF OF EX CONCRETE BARRIERS ON SITE. CONTRACTOR RESPONSIBLE FOR ANY ADDITIONAL BARRIERS REQUIRED TO CORDON OFF THE CONTRACTOR WORK AREAS.
5. REMOVE EX CONC CURB
6. REMOVE ABOVE GRADE EQUIPMENT TO 2-FT BELOW GRADE. REMOVE WIRING BACK TO POLE/PANEL. ABANDON CONDUIT IN PLACE.
7. GRIND ACP FOR PAVEMENT OVERLAY AT SCALE AREA

LEGEND:

- SAWCUT AND REMOVE FULL DEPTH ACP
- GRIND EX ACP
- CONCRETE SCALE PAD
- DRAINAGE STRUCTURE INSERT

TRUE NORTH
PROJECT NORTH

40' 0' 40' 80'
SCALE: 1"=40'

PORT OF TACOMA FILE: Q:\LB\8897-07\CADD_Active_SheetSet\889707-C01.01_C01.02

MARK:	REVISION:	BY:	APPR:	DATE:
A	SCALE REVISIONS	JAT	BJH	12/11/19

moffatt & nichol
600 UNIVERSITY STREET
SUITE# 610
SEATTLE, WA 98101
(206) 622-0222

12/02/19

S. GRAY	11/19/19
CHECKED BY	DATE
B. HALEY	11/19/19
PROJ. ENGR	DATE

PRINTED BY: BHaley Dec 11, 2019
SITE ADDRESS: 1754 THORNE RD
TACOMA, WA 98421

LOT F REDEVELOPMENT
HUSKY PROCESSING LANES
DEMOLITION AND TESC - AREA 1

TOWNSHIP: 21N | RANGE: 3E | SECTION: 34
DAT-HRZ: WA83/2011-SF | VERT: MLLW
PARCEL: LOT F | DRAWING SCALE: AS NOTED
PHASE: BID

C1.01
17 OF 59

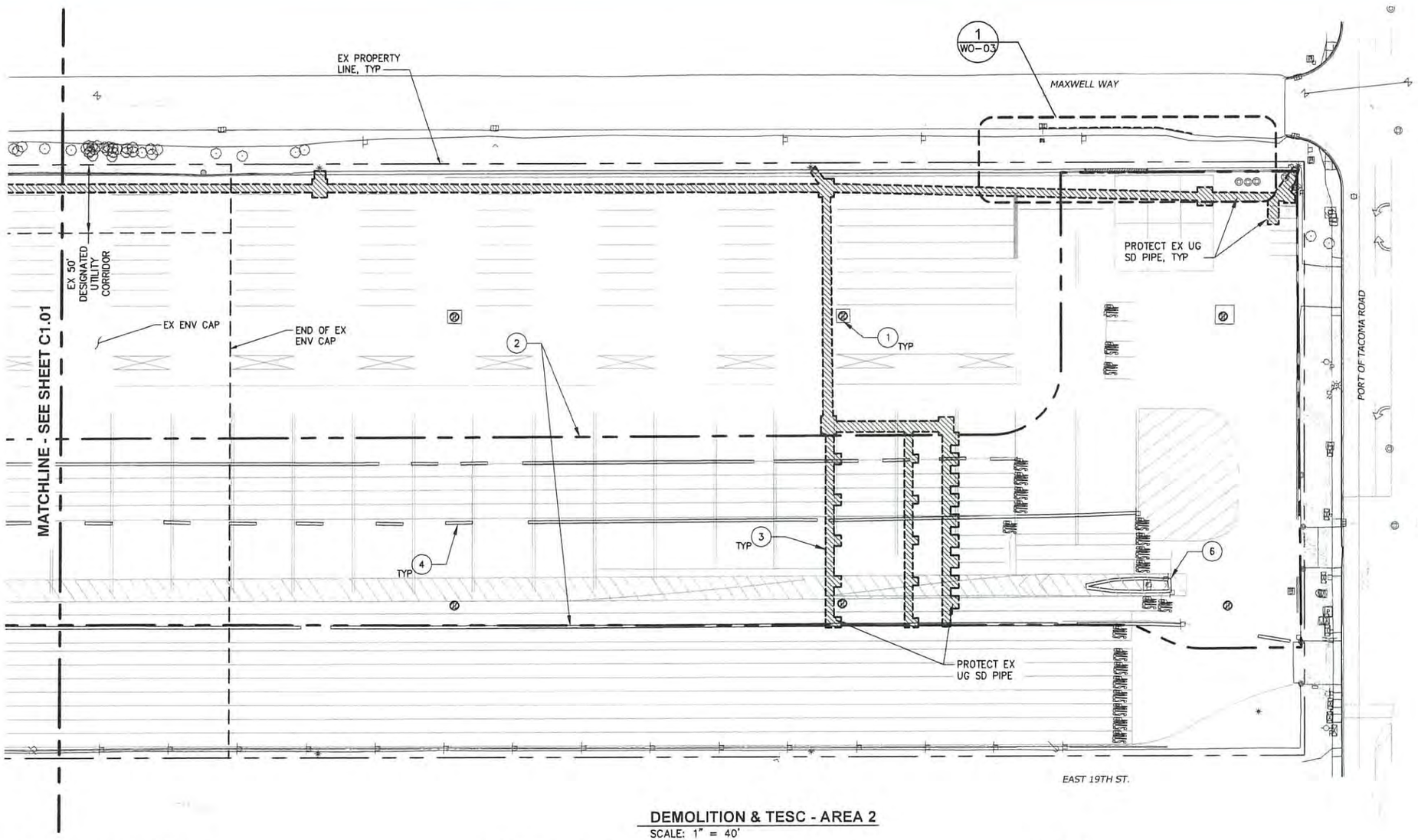

DEMOLITION & TESC - AREA 2

SCALE: 1" = 40'

DEMOLITION/TESC NOTES:

1. SEE ELECTRICAL PLANS FOR ELECTRICAL AND COMMUNICATION DEMOLITION REQUIREMENTS.
2. SEE SHEET C1.03 FOR TESC NOTES.
3. ALL UTILITIES, STRUCTURES, AND SITE FEATURES NOT INDICATED FOR DEMOLITION SHALL BE PROTECTED IN PLACE.
4. SAWCUT AREAS SHOWN DO NOT INCLUDE ALL SAWCUTTING REQUIRED FOR UTILITY WORK. REFER TO THE ELECTRICAL PLANS FOR EXTENT OF BURIED UTILITY WORK. EXTENTS WILL VARY WITH CONTRACTOR MEANS AND METHODS.

DEMOLITION/TESC KEY NOTES:

(1) PROVIDE DRAINAGE STRUCTURE INSERT, SEE SHEET C1.03 DETAIL 1

(2) REMOVE EX PAVEMENT STRIPING WITHIN THE INDICATED IMPROVEMENT AREAS; SEE LIMITS ON SHEET C2.02

(3) SAWCUT AND REMOVE EX ACP AT NEW FEATURES; SEE LIMITS ON SHEET C2.02

(4) CONTRACTOR SHALL REPOSITION EX BARRIERS DURING PHASES 1 AND 2 TO SEPARATE HUSKY AND WUT QUEUE LANES AND THE CONTRACTOR WORK AREAS. APPROXIMATELY 3,955LF OF EX CONCRETE BARRIERS ON SITE. CONTRACTOR RESPONSIBLE FOR ANY ADDITIONAL BARRIERS REQUIRED TO CORDON OFF THE CONTRACTOR WORK AREAS.

(6) REMOVE ABOVE GRADE EQUIPMENT TO 2-FT BELOW GRADE. REMOVE WIRING BACK TO POLE/PANEL. ABANDON CONDUIT IN PLACE.

LEGEND:

SAWCUT AND REMOVE ACP

DRAINAGE STRUCTURE INSERT

TRUE NORTH

PROJECT NORTH

40' 0' 40' 80'

SCALE: 1"=40'

PERMIT SET
ISSUED: 2019-11-19

CALL 2 DAYS BEFORE YOU DIG 1-800-424-5555

BINDING EDGE

PORT OF TACOMA FILE: O:\LB\8897-07\CADD_Active_SheetSet\889707-C01.01_C01.02

moffatt & nichol
600 UNIVERSITY STREET SUITE# 610 SEATTLE, WA 98101 (206) 622-0222

MARK:	REVISION:	BY:	APPR:	DATE:

HALEY NORTHWEST REGISTERED PROFESSIONAL ENGINEER

		DATE
S. GRAY	CHECKED BY	11/19/19
B. HALEY	PROJ. ENGR	11/19/19

PRINTED BY: BHaley Nov 21, 2019
SITE ADDRESS: 1754 THORNE RD
TACOMA, WA 98421

LOT F REDEVELOPMENT
HUSKY PROCESSING LANES
DEMOLITION AND TESC - AREA 2

TOWNSHIP: 21N | RANGE: 3E | SECTION: 34
DAT-HRZ: WA83/2011-SF | VERT: MLLW
PHASE: PERMIT SET | PARCEL: LOT F | DRAWING SCALE: AS NOTED

C1.02
18 OF 59

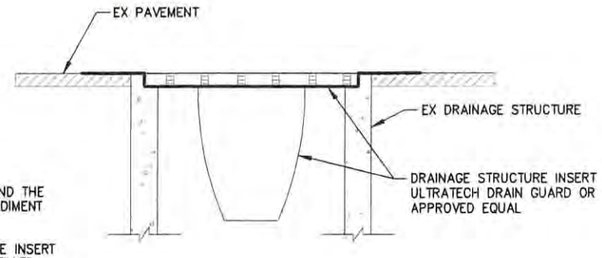

NOTES:

1. ANY ACCUMULATED SEDIMENT ON OR AROUND THE FILTER FABRIC SHALL BE REMOVED. ALL SEDIMENT SHALL BE DISPOSED OF OFF-SITE.
2. ANY SEDIMENT IN THE DRAINAGE STRUCTURE INSERT SHALL BE REMOVED WHEN SEDIMENT HAS FILLED ONE-THIRD OF THE INSERT. THE INSERT SHALL BE REPLACED MONTHLY OR AS DIRECTED BY THE ENGINEER.

1 TEMPORARY DRAINAGE STRUCTURE INSERT DETAIL

SCALE: NTS

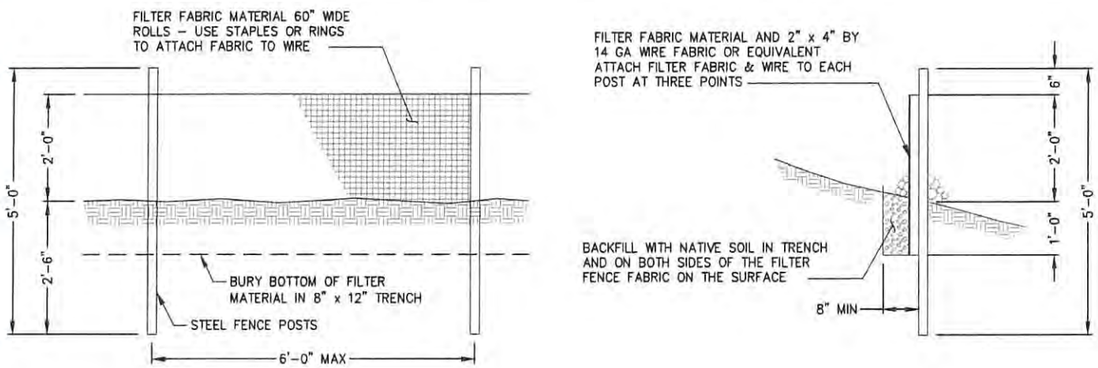

2 TEMPORARY FILTER FABRIC FENCE - DETAIL

SCALE: NTS

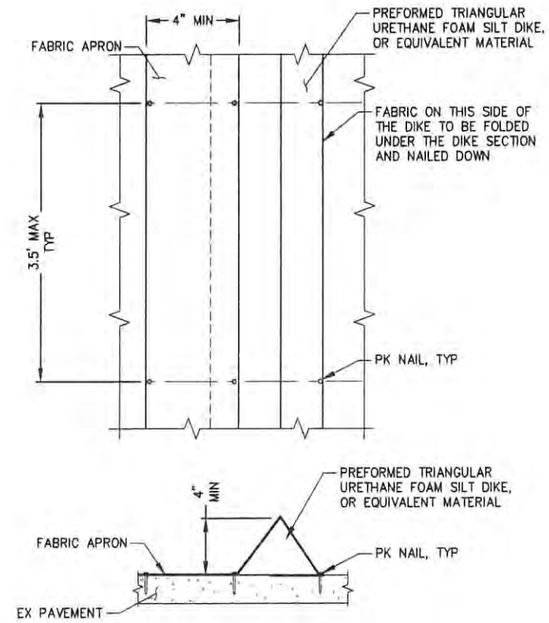

NOTES:

1. PK NAILS SHALL BE PLACED WHERE THE UNITS OVERLAP AND IN THE CENTER OF A 7-FOOT UNIT AS SHOWN ON THE DIKE PLAN.
2. ALTERNATE APPROVED HOLD DOWN DEVICE MAY BE SUBSTITUTED FOR PK NAILS (WIRE STAPLES, ETC).

3 TEMPORARY TRIANGULAR SILT DIKE - DETAIL

SCALE: NTS

TESC NOTES:

1. EROSION AND SEDIMENTATION CONTROL MEASURES SHALL BE CONSTRUCTED FOR THE SITE TO PREVENT ERODED SEDIMENT AND TURBID WATER FROM ENTERING THE CITY STORM DRAINAGE SYSTEM, RIGHT-OF-WAY, AND/OR ADJACENT PROPERTY DURING AND FOLLOWING CONSTRUCTION UNTIL ENTIRE SITE HAS BEEN STABILIZED.
2. THE CONTRACTOR SHALL BE RESPONSIBLE FOR ANY DAMAGE RESULTING FROM ON-SITE EROSION CAUSING SEDIMENT TO BE DEPOSITED OFF SITE. IF SEDIMENT IS TRANSPORTED ONTO A ROAD SURFACE, THE ROADS SHALL BE CLEANED IMMEDIATELY USING A METHOD ACCEPTABLE TO THE ENGINEER AND/OR THE CITY OF TACOMA. IF A SWEEPER IS USED, IT SHALL BE A REGENERATIVE AIR SWEEPER.
3. THE IMPLEMENTATION OF THESE TEMPORARY EROSION AND SEDIMENT CONTROL (TESC) PLANS AND THE CONSTRUCTION, MAINTENANCE, REPLACEMENT, AND UPGRADING OF THESE TESC FACILITIES ARE THE RESPONSIBILITY OF THE CONTRACTOR UNTIL ALL CONSTRUCTION IS COMPLETED AND ACCEPTED AND SHALL BE CONDUCTED IN ACCORDANCE WITH CITY OF TACOMA CONSTRUCTION STORMWATER CONTROL TECHNICAL REQUIREMENTS AND ALL OTHER APPLICABLE STANDARDS AND REGULATIONS.
4. THE BOUNDARIES OF THE PROJECT SITE (CONSTRUCTION LIMIT) SHOWN ON THIS PLAN SHALL BE CLEARLY FLAGGED IN THE FIELD PRIOR TO CONSTRUCTION. DURING THE CONSTRUCTION PERIOD, NO DISTURBANCE BEYOND THE FLAGGED CLEARING LIMITS WILL BE PERMITTED WITHOUT PRIOR APPROVAL. THE FLAGGING SHALL BE MAINTAINED BY THE CONTRACTOR FOR THE DURATION OF CONSTRUCTION.
5. THE TESC FACILITIES SHOWN ON THIS PLAN MUST BE CONSTRUCTED IN CONJUNCTION WITH CLEARING AND GRADING AND/OR DEMOLITION ACTIVITIES, AND IN SUCH A MANNER AS TO ENSURE THAT ERODED SEDIMENT OR TURBID WATER DOES NOT ENTER THE DRAINAGE SYSTEM, ROADWAYS, OR VIOLATE APPLICABLE WATER STANDARDS.
6. THE TESC FACILITIES DEPICTED ON THESE DRAWINGS ARE INTENDED TO BE MINIMUM REQUIREMENTS TO MEET ANTICIPATED SITE CONDITIONS. AS CONSTRUCTION PROGRESSES AND UNEXPECTED OR SEASONAL CONDITIONS DICTATE, THE CONTRACTOR SHOULD ANTICIPATE THAT MORE EROSION AND SEDIMENTATION CONTROL FACILITIES WILL BE NECESSARY TO INSURE COMPLETE SILTATION CONTROL ON THE PROJECT SITE. DURING THE COURSE OF CONSTRUCTION, IT SHALL BE THE OBLIGATION AND RESPONSIBILITY OF THE CONTRACTOR TO ADDRESS ANY NEW CONDITIONS THAT MAY BE CREATED BY THE CONTRACTOR'S ACTIVITIES AND TO PROVIDE ADDITIONAL FACILITIES, OVER AND ABOVE THESE MINIMUM REQUIREMENTS, AS MAY BE NEEDED TO PROTECT ADJACENT PROPERTIES AND WATER QUALITY OF THE RECEIVING DRAINAGE SYSTEM AND AS REQUIRED BY THE ENGINEER AND/OR CITY OF TACOMA.
7. THE TESC FACILITIES SHALL BE INSPECTED AS NOTED IN THE SPECIFICATIONS BY THE CONTRACTOR AND MAINTAINED AS NECESSARY TO ENSURE THEIR CONTINUED FUNCTIONING UNTIL CONSTRUCTION IS COMPLETED AND POTENTIAL FOR ON-SITE EROSION HAS PASSED.
8. IF EROSION CONTROL FACILITIES FAIL, THEY SHALL BE REPAIRED OR REPLACED IMMEDIATELY UPON RECEIVING VERBAL NOTICE OF SAID FAILURE FROM ENGINEER OR CITY OF TACOMA.
9. ANY AREA STRIPPED OF VEGETATION OR PAVEMENT WHERE NO FURTHER WORK IS ANTICIPATED FOR A PERIOD OF 15 DAYS OR MORE SHALL BE IMMEDIATELY STABILIZED WITH APPROVED TESC METHODS SUCH AS SEEDING, MULCHING, NETTING, EROSION BLANKETS, ETC.
10. TESC FACILITIES ON INACTIVE SITES SHALL BE INSPECTED AND MAINTAINED A MINIMUM OF ONCE A MONTH OR WITHIN 24 HOURS FOLLOWING A STORM EVENT.
11. AT NO TIME SHALL MORE THAN ONE FOOT OF SEDIMENT BE ALLOWED TO ACCUMULATE WITHIN A CATCH BASIN INSERT. ALL CATCH BASINS AND CONVEYANCE LINES SHALL BE CLEANED PRIOR TO PAVING. THE CLEANING OPERATION SHALL NOT FLUSH SEDIMENT LADEN WATER INTO THE DOWNSTREAM SYSTEM.
12. STABILIZED CONSTRUCTION ENTRANCES AND TIRE WASH PADS SHALL BE PROVIDED BY THE CONTRACTOR AS REQUIRED AND INSTALLED AT THE BEGINNING OF CONSTRUCTION AND MAINTAINED TO MEET ALL APPLICABLE STANDARDS FOR THE DURATION OF THE PROJECT. ADDITIONAL MEASURES MAY BE REQUIRED TO INSURE THAT ALL OFFSITE WORK AREAS ARE KEPT CLEAN FOR THE DURATION OF THE PROJECT.
13. WHERE SEEDING FOR TEMPORARY EROSION CONTROL IS REQUIRED, FAST GERMINATING GRASSES SHALL BE APPLIED AT AN APPROPRIATE RATE, AS APPROVED BY THE CITY OF TACOMA.
14. WHERE STRAW MULCH FOR TEMPORARY EROSION CONTROL IS REQUIRED, IT SHALL BE APPLIED AT A MINIMUM THICKNESS OF TWO INCHES.
15. THE CONTRACTOR SHALL PROTECT STOCK PILE AREAS FROM RELEASE OF ERODED SEDIMENT OR TURBID WATER. STOCK PILES SHALL BE COVERED AT ALL TIMES WHILE NOT IN USE TO KEEP THE STORED MATERIAL DRY.
16. ALL DISTURBED AREAS SHALL BE STABILIZED BY ACCEPTABLE METHODS FOR THE PREVENTION OF ON-SITE EROSION AFTER COMPLETION OF CONSTRUCTION.
17. ALL EROSION/SEDIMENT CONTROL PONDS WITH A DEAD STORAGE DEPTH EXCEEDING 6 INCHES MUST BE SURROUNDED WITH A FENCE WITH A MINIMUM HEIGHT OF 3 FEET.
18. EXISTING PAVED ROADS MAY BE USED AS CONSTRUCTION ENTRANCES.
19. CONTRACTOR SHALL REMOVE ALL TEMPORARY TESC FACILITIES PRIOR TO COMPLETION OF WORK.

PERMIT SET
ISSUED: 2019-11-19

moffatt & nichol
600 UNIVERSITY STREET
SUITE# 610
SEATTLE, WA 98101
(206) 622-0222

MARK:	REVISION:	BY:	APPR:	DATE:

S. GRAY — CHECKED BY — 11/19/19 DATE
B. HALEY — PROJ. ENGR — 11/19/19 DATE
PRINTED BY: BHaley Nov 21, 2019
SITE ADDRESS: 1754 THORNE RD TACOMA, WA 98421

LOT F REDEVELOPMENT
HUSKY PROCESSING LANES
DEMOLITION AND TESC - NOTES & DETAILS

TOWNSHIP: 21N | RANGE: 3E | SECTION: 34
DAT-HRZ: WAB3/2011-SF | VERT: MLLW
PARCEL: LOT F | DRAWING SCALE: AS NOTED
PHASE: PERMIT SET

C1.03
19 OF 59

BINDING EDGE

PORT OF TACOMA FILE: Q:\LB\88897-07\CADD_Active_SheetSet\889707-C01.03

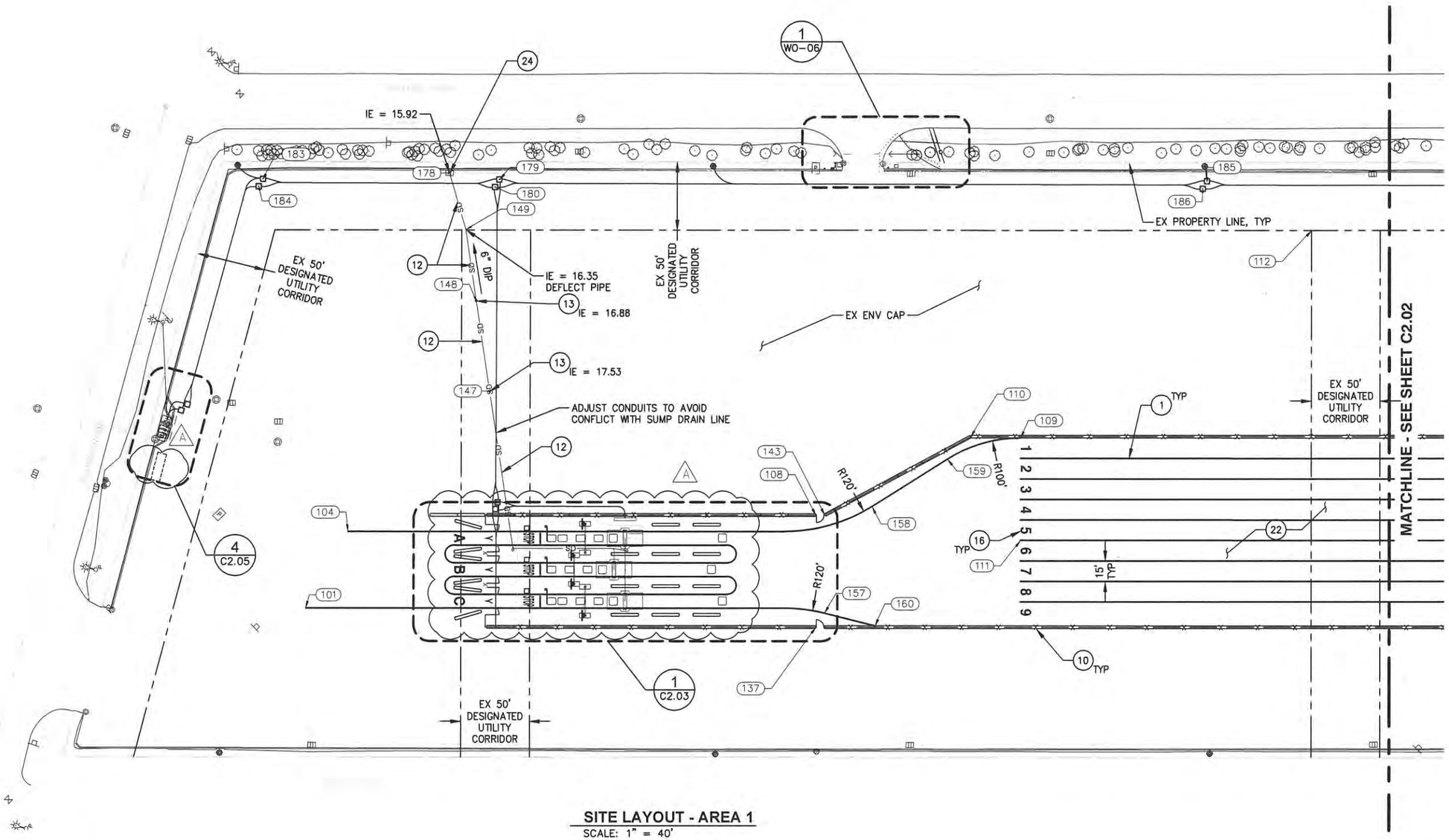

SITE LAYOUT - AREA 1

SCALE: 1" = 40'

KEY NOTES:

(1) 4" WIDE WHITE STRIPING

(10) 10' TYPE II CONC TRAFFIC BARRIER W/ FENCE, SEE C3.09 DETAIL 1

(12) SCALE SUMP DRAIN LINE, SEE NOTE 2

(13) SCALE SUMP DRAIN LINE CLEANOUT, SEE C3.10 DETAIL 2

(16) LANE DESIGNATION, SEE C3.01 DETAIL 4

(22) SEAL EX ACP CRACKS GREATER THAN 1/4" WIDE WITHIN ENV CAP AREA AND BETWEEN TRAFFIC BARRIERS PER WSDOT SPECS SECTION 5-02.3(2)E CRACK SEALING (APPROX 1,500 LF). EXCLUDES AREA OF PAVEMENT OVERLAY AT THE NEW SCALES

(24) CONNECT SCALE SUMP DRAIN LINE AT EXISTING DRAINAGE STRUCTURE. CORE EXISTING STRUCTURE AND GROUT IN DRAIN LINE

NOTES:

1. EX STRIPING, EX BARRIERS, AND PHASE 3 WORK (BY OTHERS) NOT SHOWN FOR CLARITY.
2. SCALE SUMP DRAIN INVERTS SHOWN ARE APPROXIMATE AND SHALL BE VERIFIED FOR COMPATIBILITY WITH DRAIN PAN MANUFACTURER. SUMP DRAIN PIPE SHALL BE 6" DIP. DRAIN LINE SLOPE SHALL BE 1% MIN.
3. FOUNDATION AND TRENCH EXCAVATIONS SHALL NOT EXTEND BEYOND OR DAMAGE THE GEOTEXTILE FABRIC AT THE LOWER EXTENT OF THE ENVIRONMENTAL CAP.

TRUE NORTH

PROJECT NORTH

40' 0' 40' 80'

SCALE: 1"=40'

CALL 2 DAYS BEFORE YOU DIG 1-800-424-5555

PORT OF TACOMA FILE: Q:\LB\88897-07\CADD_Active_SheetSet\989707-C02.01_C02.02

BINDING EDGE

moffatt & nichol
600 UNIVERSITY STREET SUITE# 610 SEATTLE, WA 98101 (206) 622-0222

MARK:	REVISION:	BY:	APPR:	DATE:
A	SCALE REVISIONS	JAT	BJH	12/11/19

12/02/19

S. GRAY	CHECKED BY	11/19/19 DATE
B. HALEY	PROJ. ENGR	11/19/19 DATE
PRINTED BY: Bhaley Dec 11, 2019		
SITE ADDRESS: 1754 THORNE RD TACOMA, WA 98421		

LOT F REDEVELOPMENT
HUSKY PROCESSING LANES
SITE LAYOUT - AREA 1

TOWNSHIP: 21N	RANGE: 3E	SECTION: 34	
DAT-HRZ: WA83/2011-SF	VERT: MLLW		
PHASE: BID	PARCEL: LOT F	DRAWING SCALE: AS NOTED	

C2.01
20 OF 59

BINDING EDGE

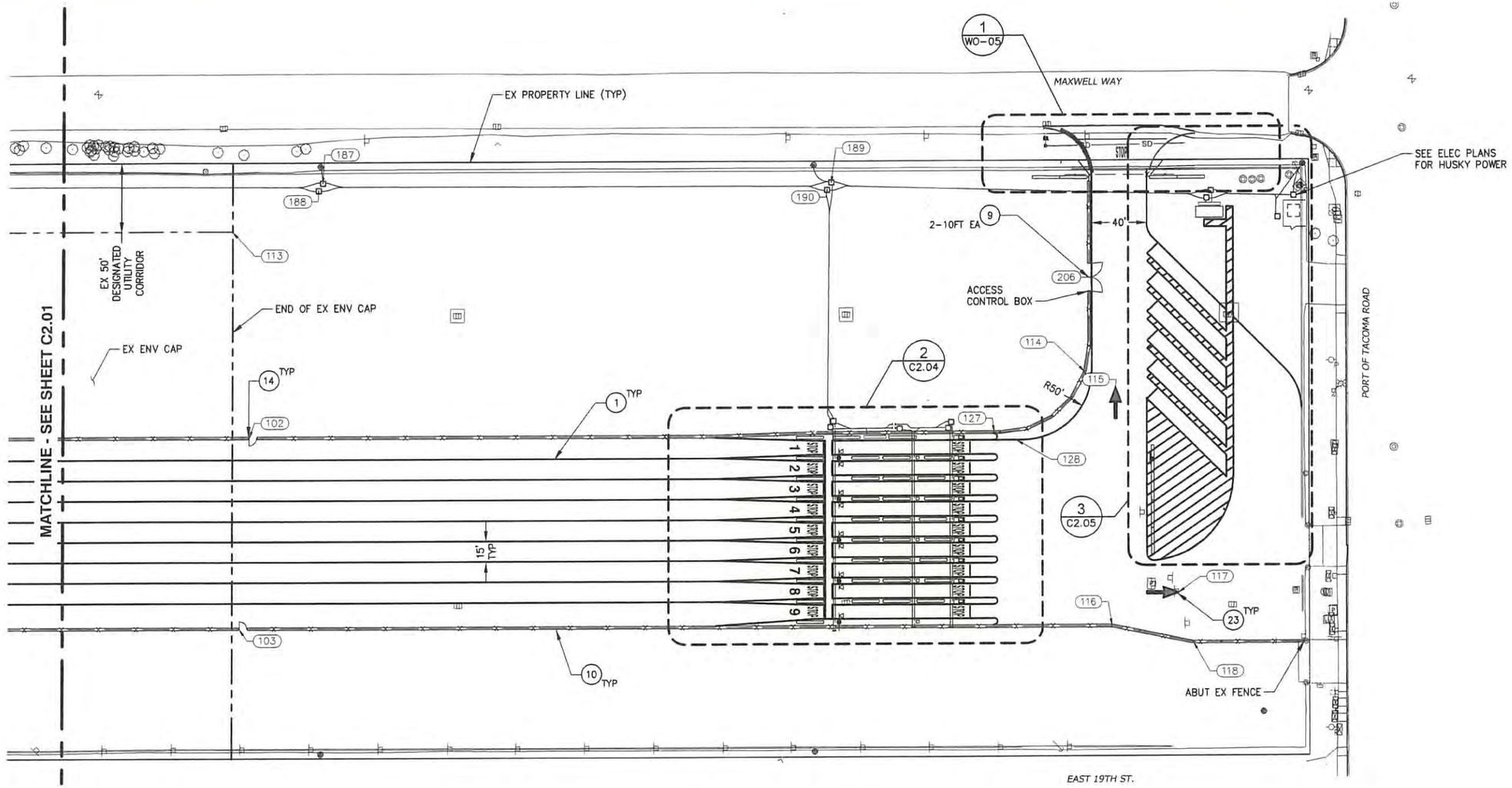

SITE LAYOUT - AREA 2

SCALE: 1" = 40'

KEY NOTES:

1. 4" WIDE WHITE STRIPING
9. CHAIN LINK GATE, SEE C3.09 DETAIL 3
10. 10' TYPE II CONC TRAFFIC BARRIER W/ FENCE, SEE C3.09 DETAIL 1
14. PERSONNEL WALK THROUGH GATE, SEE C3.09 DETAIL 2
23. CHANNELIZATION ARROW, SEE C3.01 DETAIL 5

NOTES:

1. EX STRIPING, EX BARRIERS, AND PHASE 3 WORK (BY OTHERS) NOT SHOWN FOR CLARITY.

TRUE NORTH

PROJECT NORTH

40' 0' 40' 80'

SCALE: 1"=40'

PERMIT SET
ISSUED: 2019-11-19

CALL 2 DAYS BEFORE YOU DIG 1-800-424-5555

PORT OF TACOMA FILE: Q:\LB\8897-07\CADD_Active_SheetSet\889707-C02.01_C02.02

MARK:	REVISION:	BY:	APPR:	DATE:

moffatt & nichol
600 UNIVERSITY STREET SUITE # 610 SEATTLE, WA 98101 (206) 622-0222

LOT F REDEVELOPMENT
HUSKY PROCESSING LANES
SITE LAYOUT - AREA 2

S. GRAY — CHECKED BY — 11/19/19 DATE
B. HALEY — PROJ. ENGR — 11/19/19 DATE
PRINTED BY: BHaley Nov 21, 2019
SITE ADDRESS: 1754 THORNE RD TACOMA, WA 98421

TOWNSHIP: 21N | RANGE: 3E | SECTION: 34
DAT-HRZ: WA83/2011-SF | VERT: MLLW
PARCEL: LOT F | DRAWING SCALE: AS NOTED
PHASE: PERMIT SET

C2.02
21 OF 59

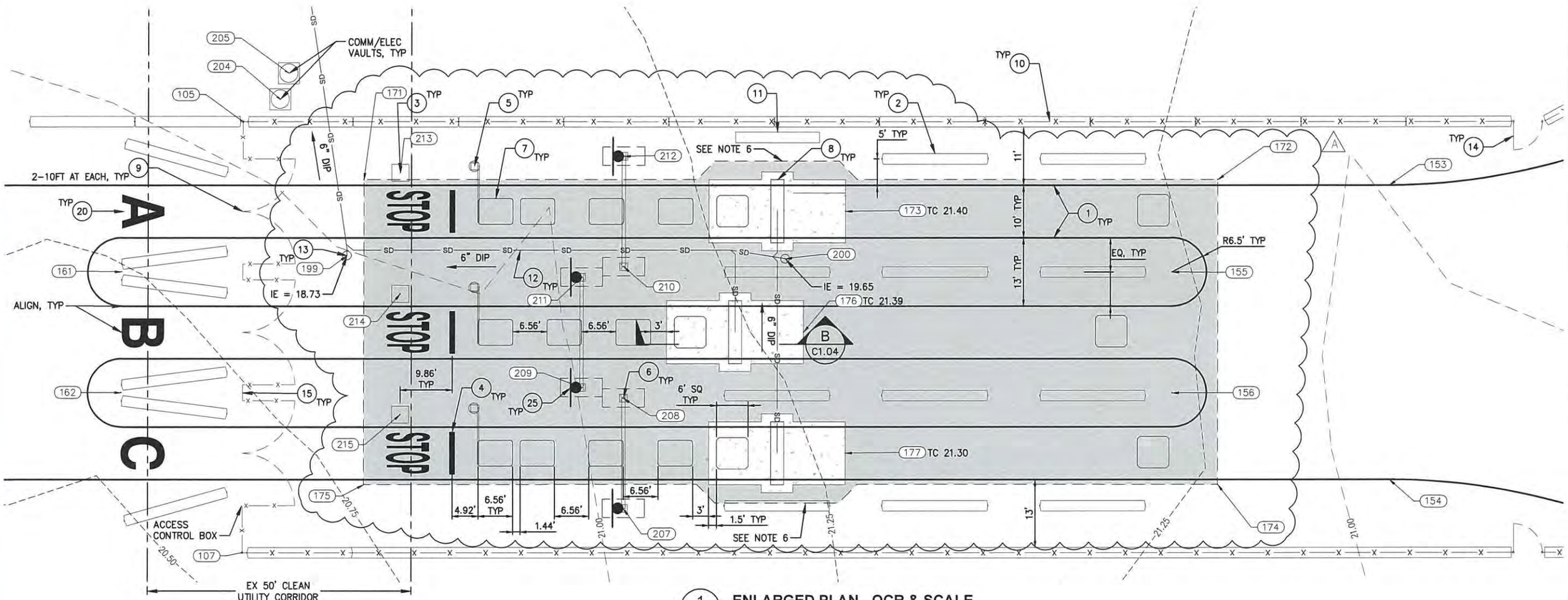

1 C2.01 **ENLARGED PLAN - OCR & SCALE**
SCALE: 1" = 10'

KEY NOTES:

1. 4" WIDE WHITE STRIPING
2. 20' TYPE II CONC TRAFFIC BARRIER, SEE C3.02 DETAIL 6
3. INTERCOM PEDESTAL, SEE C3.03 SECTION A
4. STOP BAR, SEE C3.01 DETAIL 1
5. GATE ARM, SEE C3.04 DETAIL 2
6. OCR PORTAL FRAME FOUNDATION, SEE C3.07
7. TRAFFIC LOOP
8. WIM TRUCK SCALE PER MANUFACTURER'S DETAILS
9. CHAIN LINK GATE, SEE C3.09 DETAIL 3
10. 10' TYPE II CONC TRAFFIC BARRIER W/ FENCE, SEE C3.09 DETAIL 1
11. COMM/ELEC PANEL ENCLOSURE, SEE ELECTRICAL PLANS
12. SCALE SUMP DRAIN, SEE NOTE 4
13. SCALE SUMP CLEANOUT, SEE C3.10 DETAIL 2
14. PERSONNEL WALK THROUGH GATE, SEE C3.09 DETAIL 2
15. CHAIN LINK SECURITY FENCE, SEE C3.08 DETAIL 1
20. LANE DESIGNATION, SEE SHEET C3.01 DETAIL 4
25. BARRIER MOUNTED SIGN, SEE SHEET C3.01 DETAIL 2

NOTES:

1. EX STRIPING NOT SHOWN FOR CLARITY.
2. CONSTRUCT WIM SCALE PAD PER MANUFACTURER'S DETAILS. CROSS SLOPE SHALL BE 0.00% AND LONGITUDINAL SLOPE AS DETERMINED BY ELEVATION POINTS GIVEN
3. GRIND 2 1/2" OF THE EX ACP WITHIN LIMITS SHOWN. OVERLAY TO MATCH ADJACENT EXISTING PAVEMENT AND THE ELEVATIONS OF THE PROPOSED SCALE PADS. SEE SHEET C3.02, DETAIL 1.
4. SCALE SUMP DRAIN INVERTS SHOWN ARE APPROXIMATE AND SHALL BE VERIFIED FOR COMPATIBILITY WITH DRAIN PAN MANUFACTURER. SUMP DRAIN PIPE SHALL BE 6" DIP. DRAIN LINE SLOPE SHALL BE 1% MIN.
5. FOUNDATION AND TRENCH EXCAVATIONS SHALL NOT EXTEND BEYOND OR DAMAGE THE GEOTEXTILE FABRIC AT THE LOWER EXTENT OF THE ENVIRONMENTAL CAP.
6. WIDEN PAVEMENT OVERLAY 2' AT WIM SCALES AND TRANSITION FROM PAD TC TO EXISTING GRADE.
7. THE DISTANCES SHOWN FOR LANE "C" BETWEEN INTERCOM PEDESTALS, STOP BARS, GATE ARMS DETECTOR LOOPS, OCR SUPPORTS, AND WIM SCALES ARE TYPICAL FOR LANE "A". A SIMILAR CONFIGURATION AND SPACING SHALL BE CONSTRUCTED FOR LANE "B" EXCEPT AS NOTED. (A)

LEGEND:

- ACP GRIND AND OVERLAY
- CONCRETE SCALE PAD
- SCALE SUMP DRAIN LINE

TRUE NORTH
PROJECT NORTH

10' 0' 10' 20'
SCALE: 1"=10'

CALL 2 DAYS
BEFORE YOU DIG
1-800-424-5555

PORT OF TACOMA FILE: Q:\LB\8897-07\CADD_Active_SheetSet\889707-C02.03

BINDING EDGE

MARK:	REVISION:	BY:	APPR:	DATE:
A	SCALE REVISIONS	JAT	BJH	12/11/19

moffatt & nichol
600 UNIVERSITY STREET
SUITE 610
SEATTLE, WA 98101
(206) 622-0222

12/02/19

11/19/19 DATE
11/19/19 DATE

S. GRAY
CHECKED BY
B. HALEY
PROJ. ENGR

PRINTED BY: BHaley Dec 11, 2019
SITE ADDRESS: 1754 THORNE RD
TACOMA, WA 98421

LOT F REDEVELOPMENT
HUSKY PROCESSING LANES
ENLARGED PLAN - OCR & SCALE

C2.03
22 OF 59

TOWNSHIP: 21N | RANGE: 3E | SECTION: 34
DAT-HRZ: WA83/2011-SF | VERT: MLLW
PARCEL: LOT F | DRAWING SCALE: AS NOTED
PHASE: BID

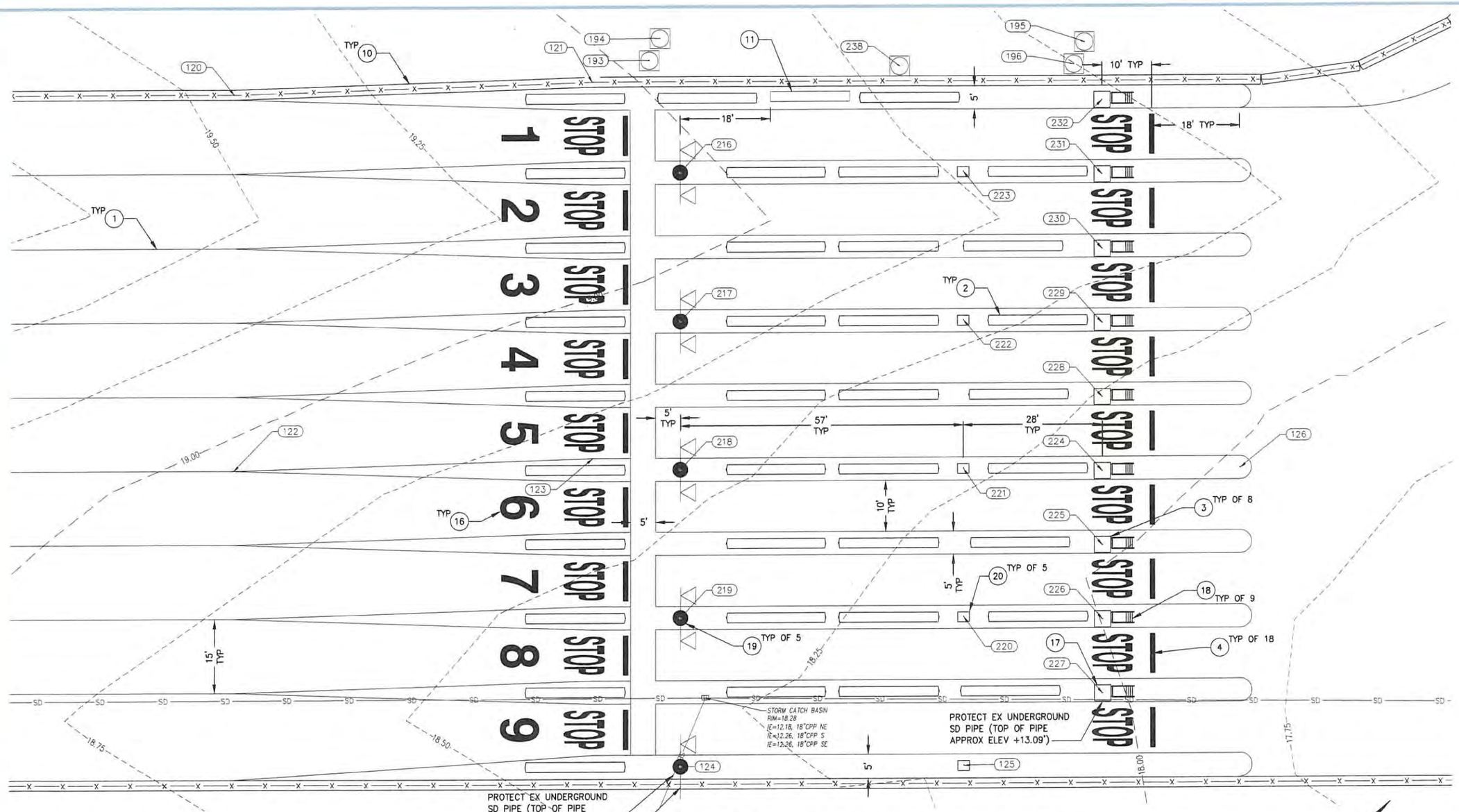

2 / C2.02 ENLARGED PLAN - PROCESSING LANES

SCALE: 1" = 10'

KEY NOTES:

1. 4" WIDE WHITE STRIPING
2. 20' TYPE II CONC TRAFFIC BARRIER , SEE SHEET 3.02 DETAIL 6
3. INTERCOM PEDESTAL, SEE SHEET C3.03 SECTION A
4. STOP BAR AND SYMBOL, SEE SHEET C3.01 DETAIL 1
10. 10' TYPE II CONC TRAFFIC BARRIER W/ FENCE, SEE SHEET C3.09 DETAIL 1
11. COMM/ELEC PANEL ENCLOSURE, SEE ELECTRICAL PLANS
16. LANE DESIGNATION, SEE SHEET C3.01 DETAIL 4
17. MODIFIED INTERCOM PEDESTAL, SEE SHEET C3.03 SECTION B
18. PEDESTAL LADDER, SEE SHEET C3.03, DETAIL 2
19. CAMERA T-POLE, SEE SHEET C3.05
20. CHASSIS CAMERA PEDESTAL, SEE SHEET C3.04 DETAIL 1

NOTES:

1. EX STRIPING NOT SHOWN FOR CLARITY.

TRUE NORTH

PROJECT NORTH

10' 0' 10' 20'

SCALE: 1"=10'

PERMIT SET
ISSUED: 2019-11-19

CALL 2 DAYS
BEFORE YOU DIG
1-800-424-5555

BINDING EDGE

PORT OF TACOMA FILE: Q:\LB8897-07\CADD_Active_SheetSet\889707-C02.04

MARK:	REVISION:	BY:	APPR:	DATE:

moffatt & nichol
1600 UNIVERSITY STREET
SUITE# 610
SEATTLE, WA 98101
(206) 622-0222

husky

S. GRAY — 11/19/19 — CHECKED BY — DATE
B. HALEY — 11/19/19 — PROJ. ENGR — DATE
PRINTED BY: BHaley Nov 21, 2019
SITE ADDRESS: 1754 THORNE RD
TACOMA, WA 98421

LOT F REDEVELOPMENT
HUSKY PROCESSING LANES
ENLARGED PLAN - PROCESSING LANES

TOWNSHIP: 21N | RANGE: 3E | SECTION: 34
DAT-HRZ: WA83/2011-SF | VERT: MLLW
PHASE: PERMIT SET | PARCEL: LOT F | DRAWING SCALE: AS NOTED

C2.04
23 OF 59

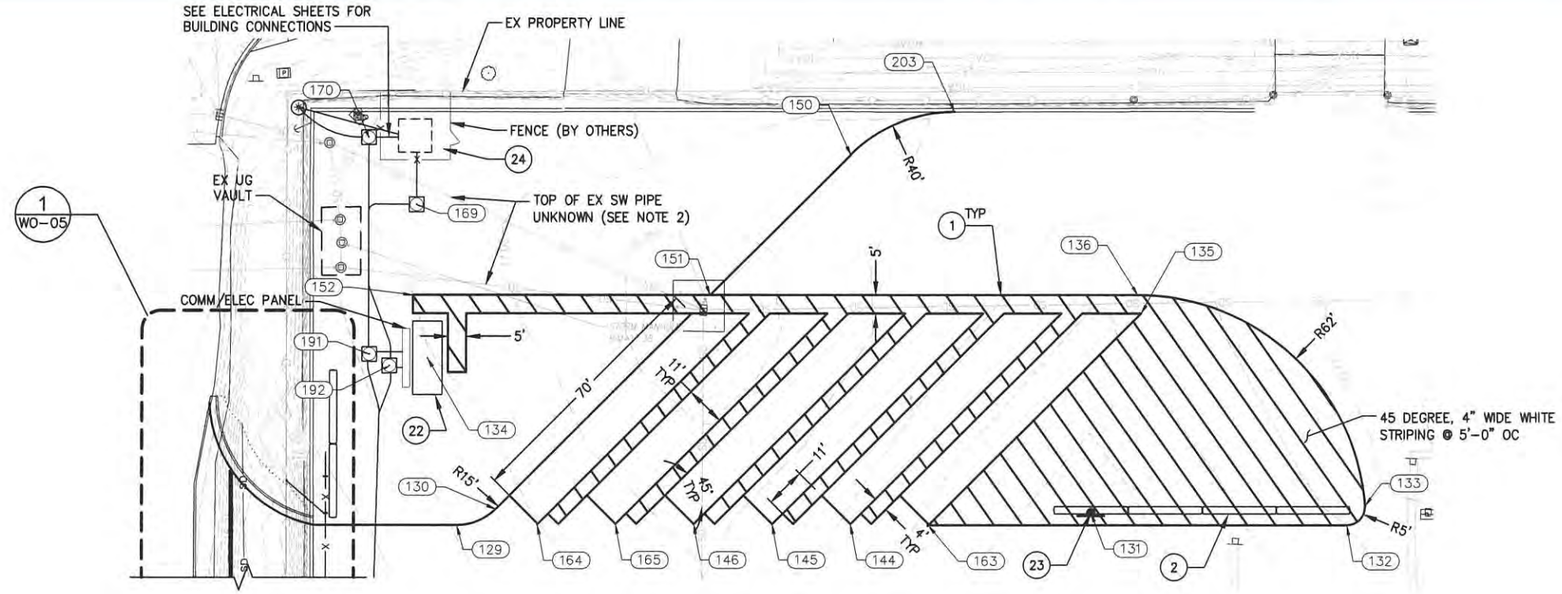

3 / C2.02 ENLARGED PLAN - TROUBLE RESOLUTION AREA

SCALE: 1" = 20'

KEY NOTES:

1. 4" WIDE WHITE STRIPING
2. 20' TYPE II CONC TRAFFIC BARRIER, SEE C3.02 DETAIL 6
22. DRIVER ASSISTANCE SHELTER, SEE SHEET C3.06
23. BARRIER MOUNTED SIGN, SEE SHEET C3.01, DETAIL 3
24. FIBER OPTIC HUT (BY OTHERS)
25. EXTRUDED CEMENT CONCRETE CURB, SEE SHEET C3.02, DETAIL 5

NOTES:

1. EX STRIPING NOT SHOWN FOR CLARITY.
2. CONTRACTOR SHALL LOCATE AND PROTECT ALL EXISTING UTILITIES. ADJUST DEPTH OF PROPOSED CONDUITS AS NECESSARY.

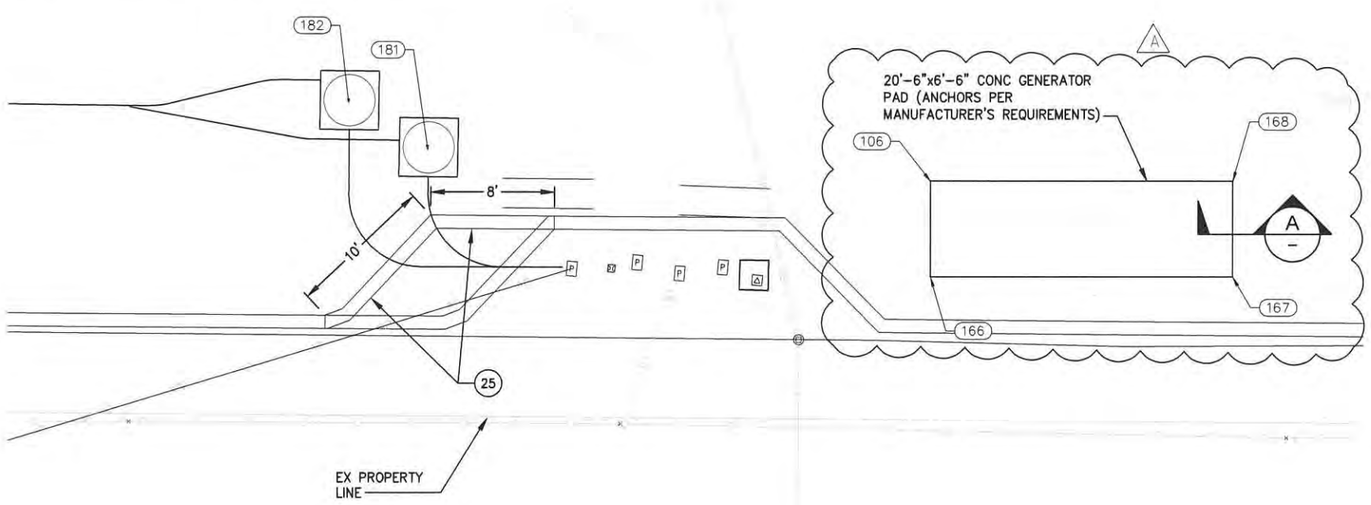

4 / C2.01 ENLARGED PLAN - GENERATOR

SCALE: 1" = 5'

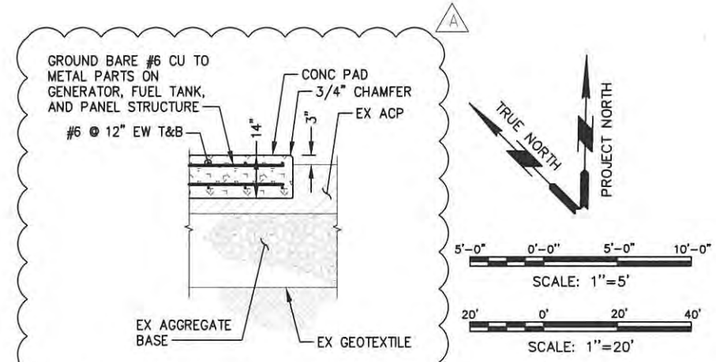

A / – SECTION - GENERATOR PAD

SCALE: 1/2" = 1'-0"

CALL 2 DAYS BEFORE YOU DIG 1-800-424-5555

BINDING EDGE

PORT OF TACOMA FILE: Q:\LB\8897-07\CADD_Active_SheetSet\889707-C02.05

MARK:	REVISION:	BY:	APPR:	DATE:
A	SCALE REVISIONS	JAT	BJH	12/11/19

moffatt & nichol 600 UNIVERSITY STREET SUITE# 610 SEATTLE, WA 98101 (206) 622-0222

12/02/19

S. GRAY 11/19/19 DATE
CHECKED BY
B. HALEY 11/19/19 DATE
PROJ. ENGR
PRINTED BY: BHaley Dec 12, 2019
SITE ADDRESS: 1754 THORNE RD TACOMA, WA 98421

LOT F REDEVELOPMENT
HUSKY PROCESSING LANES
ENLARGED PLAN - TROUBLE RESOLUTION AREA

TOWNSHIP: 21N | RANGE: 3E | SECTION: 34
DAT-HRZ: WA83/2011-SF | VERT: MLLW
PHASE: BID | PARCEL: LOT F | DRAWING SCALE: AS NOTED

C2.05
24 OF 59

BINDING EDGE

CONTROL POINT DATA

POINT No.	NORTHING	EASTING	NOTES
101	708221.94	1167882.44	BEGIN STRIPING
102	709002.91	1168464.50	WALK THROUGH GATE
103	708900.84	1168559.86	WALK THROUGH GATE
104	708282.96	1167863.59	STRIPING TANGENT
105	708363.67	1167924.96	FENCE ON BARRIER CORNER
106	708227.81	1167732.61	GENERATOR CORNER A
107	708306.59	1167983.84	FENCE ON BARRIER CORNER
108	708536.70	1168092.68	WALK THROUGH GATE
109	708683.19	1168155.99	STRIPING CTL
110	708657.72	1168129.90	TRAFFIC BARRIER CORNER
111	708630.99	1168209.84	BEGIN QUEUE LANE STRIPING
112	708941.07	1168194.37	DESIGNATED UTILITY CORRIDOR CORNER
113	709099.08	1168347.56	DESIGNATED UTILITY CORRIDOR CORNER
114	709476.05	1168858.12	STRIPING TANGENT
115	709480.23	1168878.71	ARROW CONROL POINT
116	709356.90	1169001.92	TRAFFIC BARRIER CORNER
117	709408.09	1169018.04	ARROW CONTROL POINT
118	709390.66	1169051.54	TRAFFIC BARRIER CORNER
119	709620.59	1168783.71	CONNECT TO EX FENCE
120	709246.79	1168700.90	TRAFFIC BARRIER CORNER
121	709300.40	1168749.62	TRAFFIC BARRIER CORNER
122	709193.89	1168755.47	STRIPING CONTROL POINT
123	709247.53	1168804.21	STRIPING CONTROL POINT
124	709216.76	1168861.21	CAMERA T-POLE
125	709257.80	1168900.84	CHASSIS CAMERA PEDESTAL
126	709339.42	1168896.54	STRIPING CTL
127	709393.94	1168840.29	END TRAFFIC BARRIER
128	709401.75	1168855.75	STRIPING TANGENT
129	709579.93	1168808.37	STRIPING TANGENT
130	709575.70	1168819.04	STRIPING CONTROL POINT
131	709462.54	1168934.52	SIGN
132	709411.68	1168981.98	STRIPING TANGENT
133	709412.08	1168989.30	STRIPING TANGENT
134	709618.17	1168834.25	DRIVER ASSISTANCE SHELTER CENTER
135	709492.02	1168981.86	STRIPING TANGENT
136	709496.19	1168984.73	STRIPING TANGENT
137	708479.61	1168151.54	WALK THROUGH GATE
138	709576.12	1168740.56	CONNECT TO EX FENCE
139	709574.43	1168753.61	END FENCE
140	709576.82	1168754.08	STRIPING TANGENT
141	709606.93	1168785.10	END FENCE
142	709606.92	1168780.50	STRIPING TANGENT
143	708541.41	1168097.09	TRAFFIC BARRIER CORNER
144	709505.74	1168885.36	STRIPING TANGENT
145	709520.50	1168870.12	STRIPING TANGENT
146	709535.26	1168854.89	STRIPING TANGENT
147	708428.74	1167861.74	SUMP DRAIN CLEANOUT
148	708467.67	1167807.35	SUMP DRAIN CLEANOUT
149	708498.38	1167764.54	SUMP DRAIN

CONTROL POINT DATA

POINT No.	NORTHING	EASTING	NOTES
150	709577.84	1168955.16	STRIPING TANGENT
151	709577.00	1168901.35	STRIPING TANGENT
152	709633.26	1168843.30	STRIPING TANGENT
153	708511.67	1168085.23	STRIPING TANGENT
154	708472.70	1168125.44	STRIPING TANGENT
155	708470.57	1168068.38	STRIPING CTL A
156	708454.56	1168084.89	STRIPING CTL
157	708491.26	1168148.53	STRIPING TANGENT
158	708570.38	1168116.46	STRIPING TANGENT
159	708634.25	1168129.95	STRIPING TANGENT
160	708511.18	1168180.75	STRIPING TANGENT
161	708327.37	1167929.49	STRIPING CTL
162	708311.36	1167946.00	STRIPING CTL
163	709490.74	1168900.41	STRIPING TANGENT
164	709564.79	1168824.27	STRIPING TANGENT
165	709550.03	1168839.65	STRIPING TANGENT
166	708223.63	1167725.79	GENERATOR CORNER
167	708210.84	1167733.63	GENERATOR CORNER A
168	708215.02	1167740.45	GENERATOR CORNER
169	709650.23	1168861.08	VAULT
170	709672.29	1168864.49	VAULT
171	708372.59	1167948.96	OVERLAY LIMITS
172	708488.98	1168061.76	OVERLAY LIMITS A
173	708434.10	1168016.92	SCALE SLAB
174	708448.61	1168103.41	OVERLAY LIMITS
175	708332.22	1167990.62	OVERLAY LIMITS
176	708412.34	1168027.88	SCALE SLAB
177	708402.08	1168049.96	SCALE SLAB
178	708518.37	1167726.68	INVERT
179	708541.15	1167755.29	VAULT
180	708535.10	1167756.91	VAULT
181	708257.25	1167715.34	VAULT
182	708263.54	1167715.25	VAULT
183	708417.53	1167634.88	VAULT
184	708411.48	1167636.61	VAULT
185	708911.22	1168115.39	VAULT
186	708905.18	1168117.12	VAULT
187	709170.87	1168368.17	VAULT
188	709164.83	1168369.89	VAULT
189	709436.61	1168626.66	VAULT
190	709430.57	1168628.39	VAULT
191	709629.87	1168823.67	VAULT
192	709623.83	1168825.40	VAULT
193	709311.61	1168754.52	VAULT
194	709316.24	1168752.83	VAULT
195	709376.99	1168813.02	VAULT
196	709372.37	1168814.71	VAULT

CONTROL POINT DATA

POINT No.	NORTHING	EASTING	NOTES
199	708360.25	1167957.07	SUMP DRAIN CLEANOUT A
200	708420.34	1168013.92	SUMP DRAIN CLEANOUT
203	709566.57	1168983.64	STRIPING TANGENT
204	708371.70	1167926.78	VAULT
205	708376.32	1167924.30	VAULT
206	709522.38	1168807.38	SWING GATE
207	708364.49	1168028.22	OCR FOUNDATION
208	708379.10	1168013.15	OCR FOUNDATION A
209	708374.77	1168006.12	OCR FOUNDATION
210	708396.52	1167995.17	OCR FOUNDATION
211	708389.37	1167991.06	OCR FOUNDATION
212	708411.14	1167980.10	OCR FOUNDATION
213	708378.45	1167952.81	INTERCOM PEDESTAL
214	708362.44	1167969.33	INTERCOM PEDESTAL
215	708346.43	1167985.85	INTERCOM PEDESTAL
216	709300.26	1168775.02	CAMERA T-POLE
217	709279.38	1168796.56	CAMERA T-POLE
218	709258.50	1168818.10	CAMERA T-POLE
219	709237.63	1168839.65	CAMERA T-POLE
220	709278.68	1168879.30	CHASSIS CAMERA PEDESTAL
221	709299.56	1168857.76	CHASSIS CAMERA PEDESTAL
222	709320.44	1168836.22	CHASSIS CAMERA PEDESTAL
223	709341.32	1168814.68	CHASSIS CAMERA PEDESTAL
224	709319.18	1168877.67	INTERCOM PEDESTAL
225	709308.74	1168888.44	INTERCOM PEDESTAL
226	709298.30	1168899.21	INTERCOM PEDESTAL
227	709287.86	1168909.98	MODIFIED INTERCOM PEDESTAL
228	709329.62	1168866.90	INTERCOM PEDESTAL
229	709340.06	1168856.13	INTERCOM PEDESTAL
230	709350.52	1168845.38	INTERCOM PEDESTAL
231	709360.94	1168834.59	INTERCOM PEDESTAL
232	709371.38	1168823.82	INTERCOM PEDESTAL
238	709346.93	1168790.52	VAULT

CALL 2 DAYS
BEFORE YOU DIG
1-800-424-5555

PORT OF TACOMA FILE: Q:\LB\8897-07\CADD_Active_SheetSet\889707-C02.06

PORTS. Husky

moffatt & nichol
600 UNIVERSITY STREET
SUITE# 610
SEATTLE, WA 98101
(206) 622-0222

MARK:	REVISION:	BY:	APPR:	DATE:
A	SCALE REVISIONS	JAT	BJH	12/11/19

12/02/19

11/19/19 DATE
CHECKED BY: S. GRAY
11/19/19 DATE
PROJ. ENGR: B. HALEY
PRINTED BY: BHaley Dec 11, 2019
SITE ADDRESS: 1754 THORNE RD
TACOMA, WA 98421

LOT F REDEVELOPMENT
HUSKY PROCESSING LANES
CONTROL POINT TABLE

TOWNSHIP: 21N | RANGE: 3E | SECTION: 34
DAT-HRZ: WA83/2011-SF | VERT: MLLW
PARCEL: LOT F | DRAWING SCALE: AS NOTED
PHASE: BID

C2.06
25 OF 59

BINDING EDGE

NOTES:

1. PAVEMENT MARKINGS SHALL BE PER THE MUTCD GUIDELINES. SUBMIT DETAILED MARKING DETAILS FOR APPROVAL.
2. SIGNS SHALL BE PER THE MUTCD GUIDELINES. SUBMIT DETAILED SIGN DETAILS FOR APPROVAL.

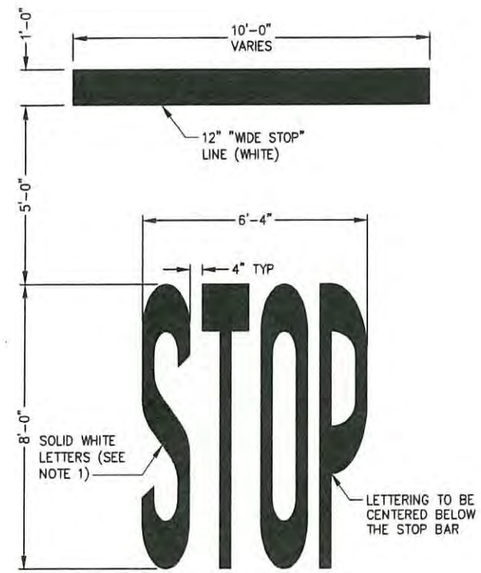

1 / – STOP BAR AND SYMBOL DETAIL
C2.03, C2.04
SCALE: NTS

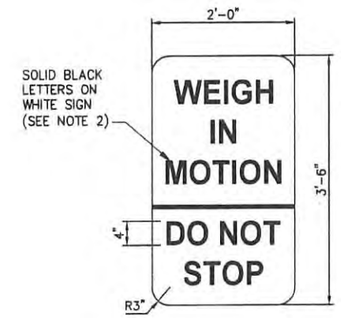

2 / C2.03 WEIGH IN MOTION - DO NOT STOP SIGN
SCALE: NTS

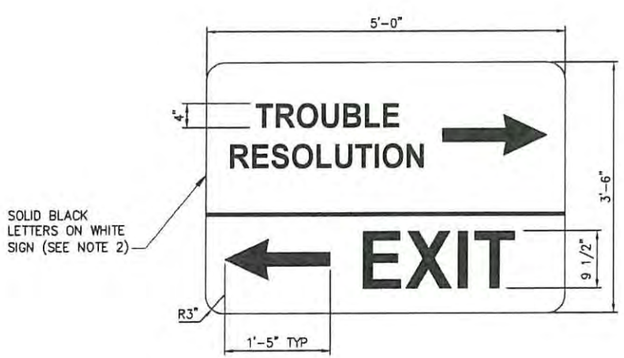

3 / C2.05 TROUBLE RESOLUTION-EXIT SIGN
SCALE: NTS

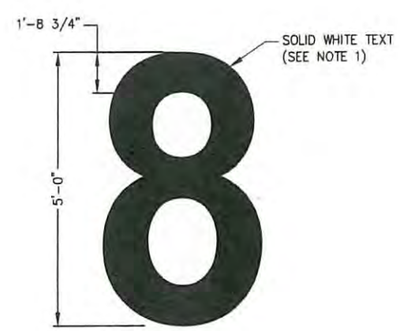

4 / – LANE DESIGNATION DETAIL
C2.03, C2.04
SCALE: NTS

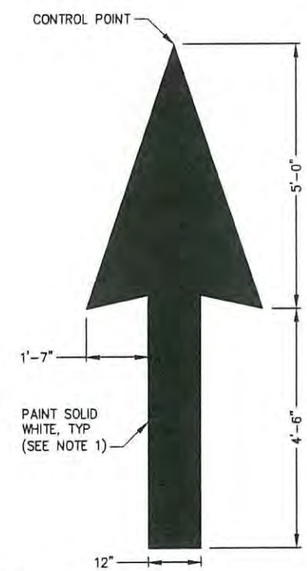

5 / C2.02 CHANNELIZATION ARROW DETAIL
SCALE: NTS

PERMIT SET
ISSUED: 2019-11-19

MARK:	REVISION:	BY:	APPR:	DATE:

moffatt & nichol
600 UNIVERSITY STREET
SUITE# 610
SEATTLE WA 98101
(206) 622-0222

HALEY
WASHINGTON
PROFESSIONAL ENGINEER

		DATE
S. GRAY		11/19/19
CHECKED BY		DATE
B. HALEY		11/19/19
PROJ. ENGR		DATE

PRINTED BY: BHaley Nov 21, 2019
SITE ADDRESS: 1754 THORNE RD
TACOMA, WA 98421

LOT F REDEVELOPMENT
HUSKY PROCESSING LANES
DETAILS - PAVEMENT MARKINGS & SIGNS

TOWNSHIP: 21N | RANGE: 3E | SECTION: 34
DAT-HRZ: WAB3/2011-SF | VERT: MLLW
PARCEL: LOT F | DRAWING SCALE: AS NOTED

C3.01
26 OF 59

PHASE: PERMIT SET

PORT OF TACOMA FILE: Q:\LB\8897-07\CADD_Active_SheetSet\889707-C03.01

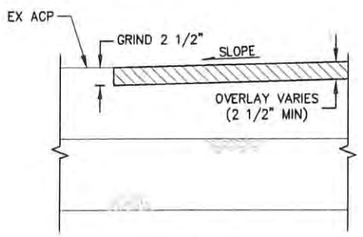

1 / C2.03 **DETAIL**
SCALE: 1" = 1'-0"

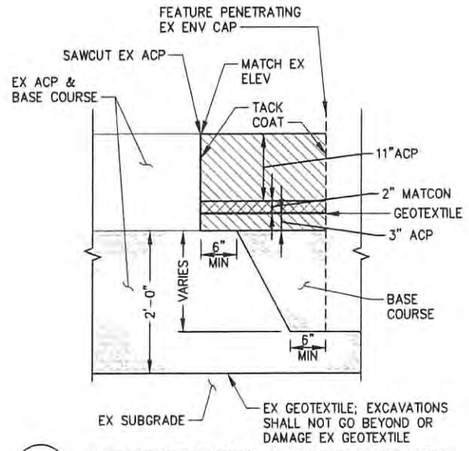

2 / VARIES **CAP RESTORATION - ABOVE SUBGRADE**
SCALE: 1" = 1'-0"

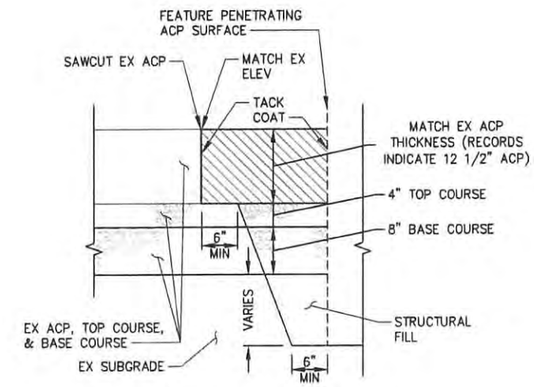

4 / – **PAVEMENT RESTORATION**
C2.01, C2.02, C2.03, C2.04
SCALE: 1" = 1'-0"

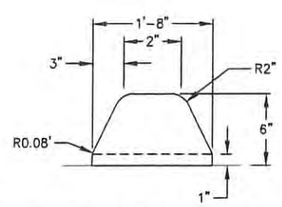

5 / C2.05 **EXTRUDED CEMENT CONC CURB**
SCALE: NTS

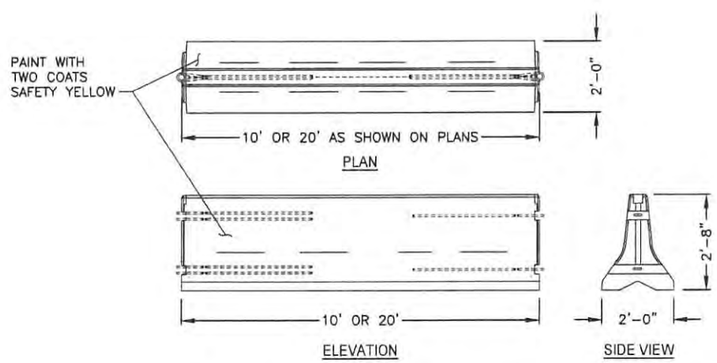

6 / – **DETAIL - TYPE II CONC TRAFFIC BARRIER**
C2.01, C2.02, C2.03, C2.04
SCALE: NTS

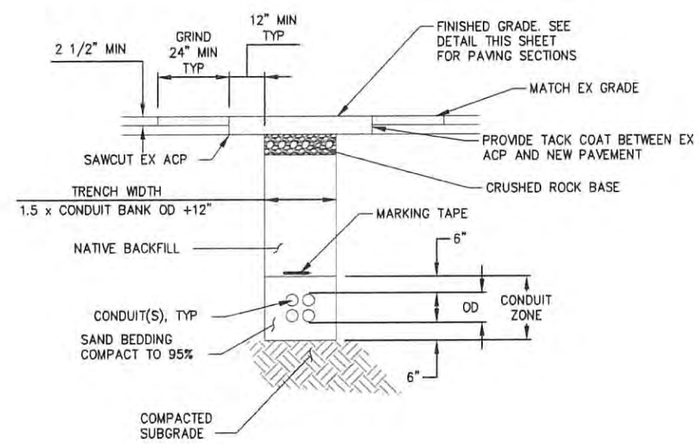

7 / – **TRENCH BACKFILL**
C2.01, C2.02, C2.03, C2.04
SCALE: NTS

NOTES:

1. PROVIDE PVC CONDUIT SADDLE SPACERS WHERE MULTIPLE CONDUITS ARE INSTALLED.
2. NATIVE BACKFILL SHALL BE CLEANED ORGANIC MATERIAL AND COBBLE LARGER THAN 3" AND SHALL BE COMPACTED TO 95% DRY DENSITY.

1' 0' 1' 2'
SCALE: 1"=1'

PERMIT SET
ISSUED: 2019-11-19

BINDING EDGE

PORT OF TACOMA FILE: Q:\LB\8897-07\CADD_Active_SheetSet\889707-C03.02

moffatt & nichol
600 UNIVERSITY STREET
SUITE# 610
SEATTLE, WA 98101
(206) 622-0222

MARK:	REVISION:	BY:	APPR:	DATE:

S. GRAY		11/19/19
CHECKED BY		DATE
B. HALEY		11/19/19
PROJ. ENGR		DATE

PRINTED BY: BHaley Nov 21, 2019
SITE ADDRESS: 1754 THORNE RD
TACOMA, WA 98421

LOT F REDEVELOPMENT
HUSKY PROCESSING LANES
DETAILS - PAVEMENT & BARRIERS

TOWNSHIP: 21N | RANGE: 3E | SECTION: 34
DAT-HRZ: WA83/2011 - SF | VERT: MLLW
PHASE: PERMIT SET | PARCEL: LOT F | DRAWING SCALE: AS NOTED

C3.02
27 OF 59

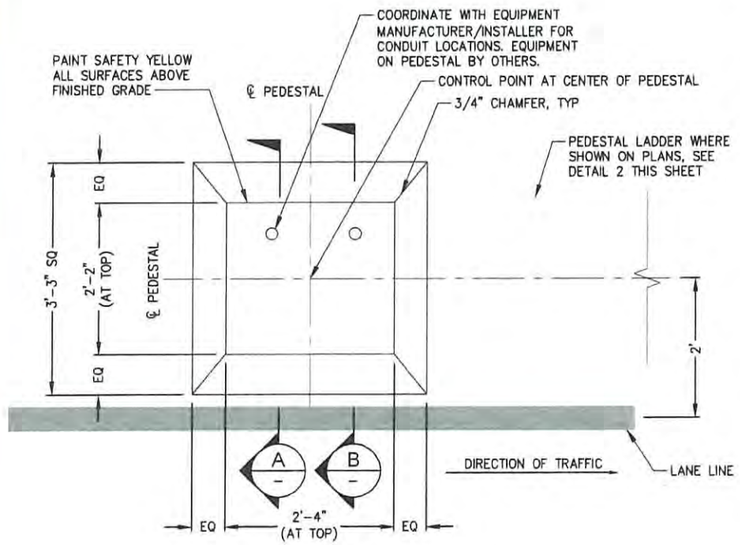

1 — INTERCOM PEDESTAL PLAN
SCALE: 1" = 1'-0"

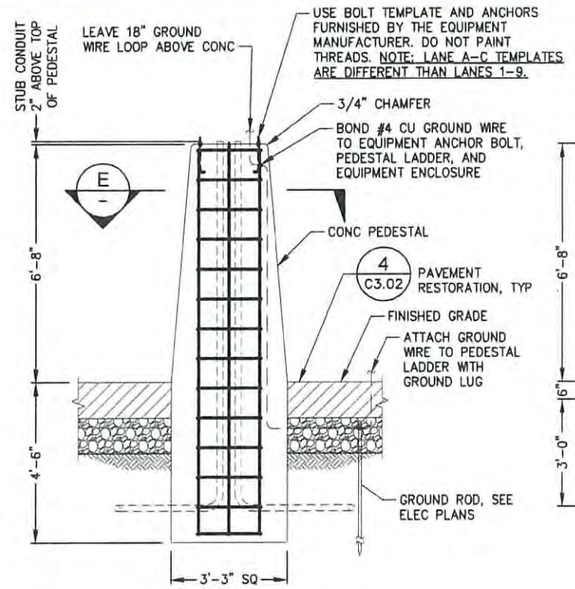

A C2.04 — SECTION - TYPICAL
C2.03
SCALE: 1/2" = 1'-0"

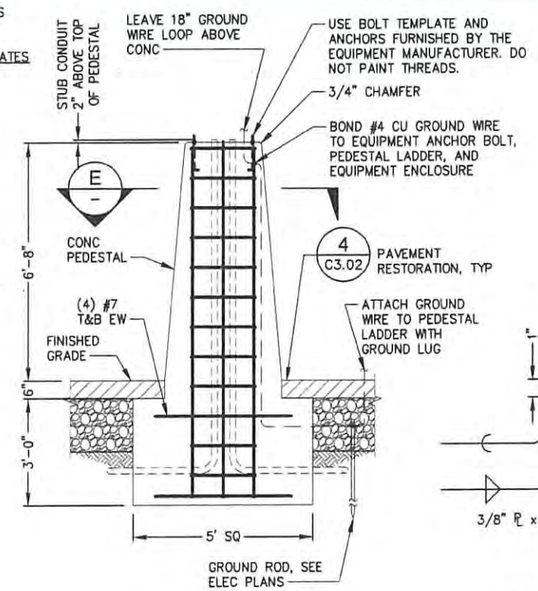

B C2.04 — SECTION - LANE 9
SCALE: 1/2" = 1'-0"

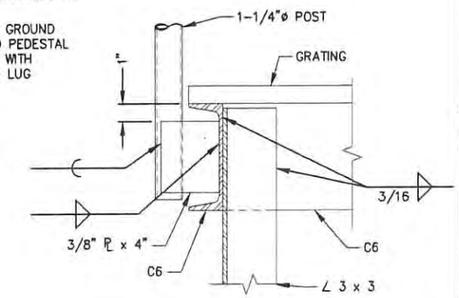

D — HANDRAIL CONNECTION
SCALE: 3" = 1'-0"

NOTE:

1. PEDESTAL LADDERS TO BE HOT DIP GALVANIZED AND PAINTED SAFETY YELLOW TO MATCH PEDESTAL.

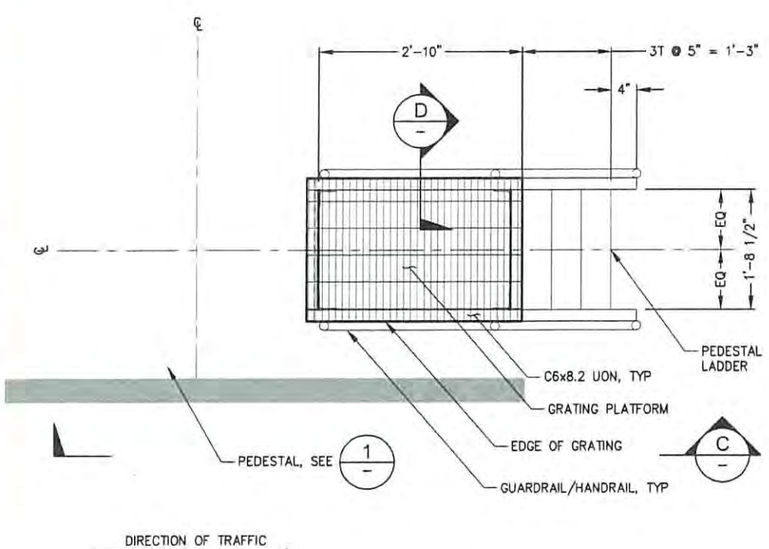

2 C2.04 — PEDESTAL LADDER PLAN
SCALE: 1" = 1'-0"

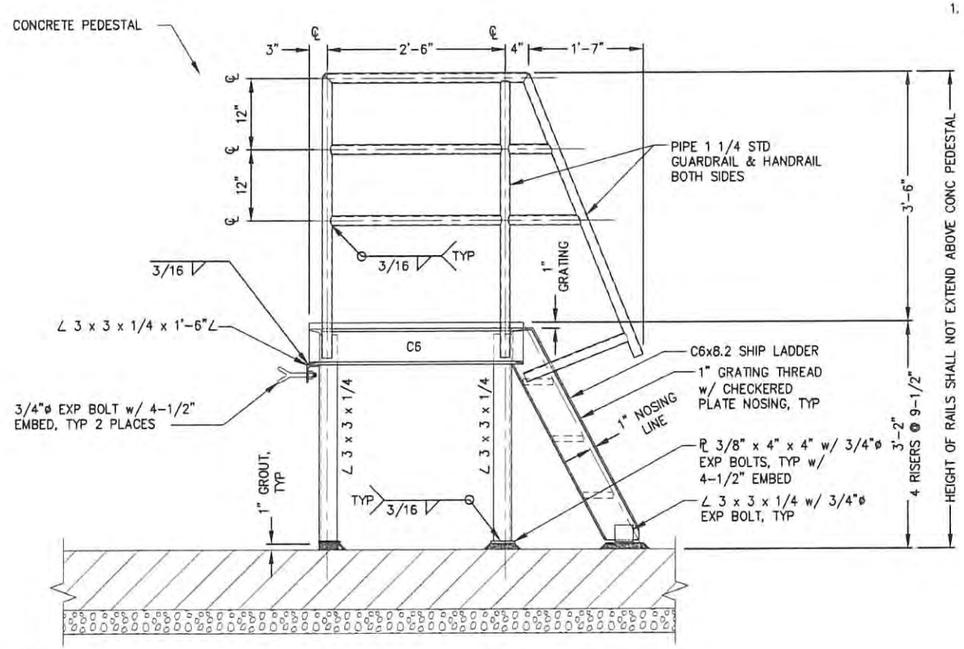

NOTE:
SHOP WELD PLATFORM, LADDER, AND HANDRAIL.

C — PEDESTAL LADDER ELEVATION
SCALE: 1/2" = 1'-0"

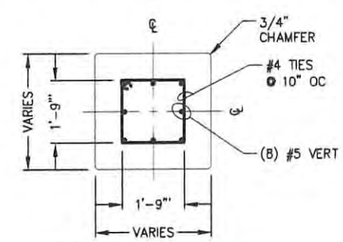

E — SECTION
SCALE: 1" = 1'-0"

2'-0" 0'-0" 2'-0" 4'-0"
SCALE: 1/2"=1'-0"

6" 0'-0" 3" 6"
SCALE: 3"=1'-0"

1'-0" 0'-0" 6" 1'-0"
SCALE: 1 1/2"=1'-0"

1'-0" 0'-0" 1'-0" 2'-0"
SCALE: 1"=1'-0"

PERMIT SET
ISSUED: 2019-11-19

CALL 2 DAYS BEFORE YOU DIG
1-800-424-5555

BINDING EDGE

PORT OF TACOMA FILE: Q:\LB\8897-07\CADD_Active_SheetSet\889707-C03.03

MARK:	REVISION:	BY:	APPR:	DATE:

mcfarr & nichol — 600 UNIVERSITY STREET SUITE# 610 SEATTLE, WA 98101 (206) 622-0222

		DATE
S. GRAY	CHECKED BY	11/19/19
B. HALEY	PROJ. ENGR	11/19/19

PRINTED BY: BHaley Nov 21, 2019
SITE ADDRESS: 1754 THORNE RD TACOMA, WA 98421

LOT F REDEVELOPMENT
HUSKY PROCESSING LANES
DETAILS - INTERCOM PEDESTAL DETAILS

TOWNSHIP: 21N | RANGE: 3E | SECTION: 34
DAT-HRZ: WAB3/2011-SF | VERT: MLLW
PHASE: PERMIT SET | PARCEL: LOT F | DRAWING SCALE: AS NOTED

C3.03
28 OF 59

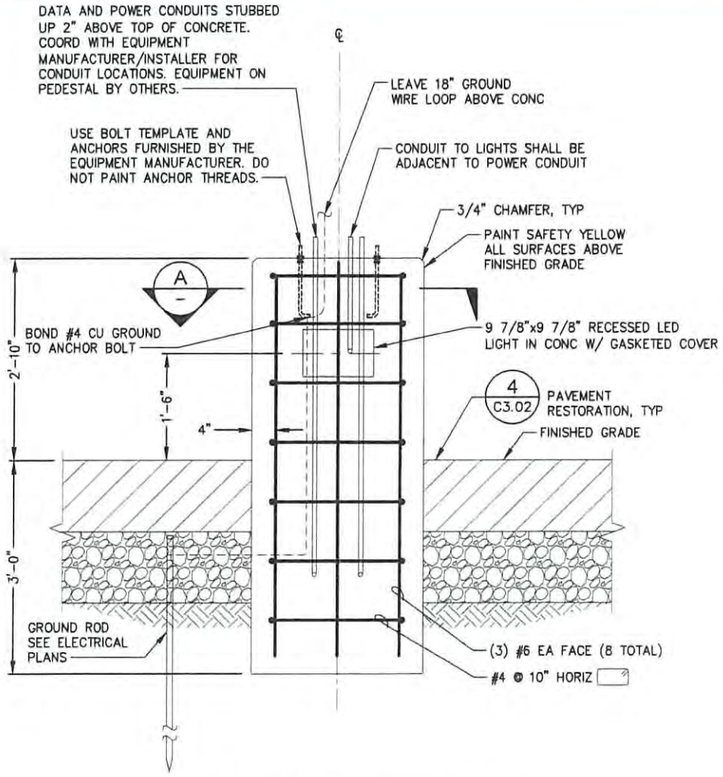

1 C2.04 **CHASSIS CAMERA PEDESTAL DETAIL**
SCALE: 1" = 1'-0"

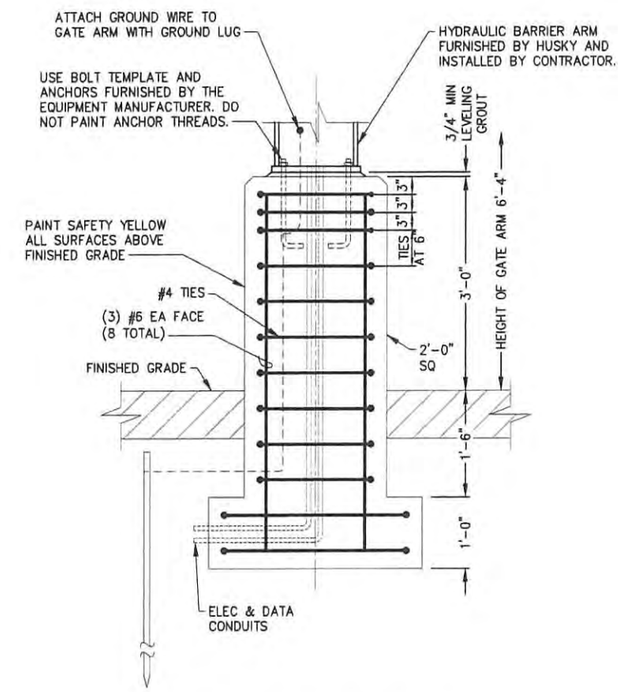

2 C2.03 **GATE ARM FOUNDATION DETAIL**
SCALE: 1" = 1'-0"

NOTE:

1. COORDINATE WITH OWNER FOR CHASSIS CAMERA AND INTERCOM PEDESTAL ANCHOR BOLT LAYOUTS, PRIOR TO SUBMITTING SHOP DRAWINGS. OWNER TO SUPPLY ANCHOR BOLT TEMPLATE UPON REQUEST GIVEN 15 DAY NOTICE.

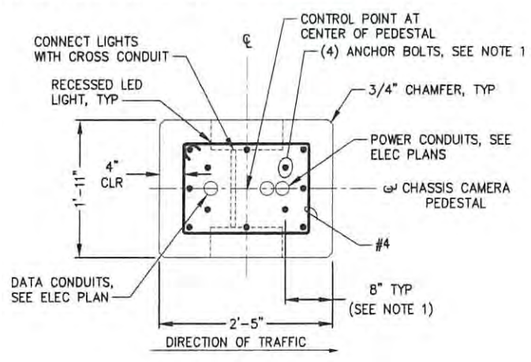

A – **SECTION**
SCALE: 1" = 1'-0"

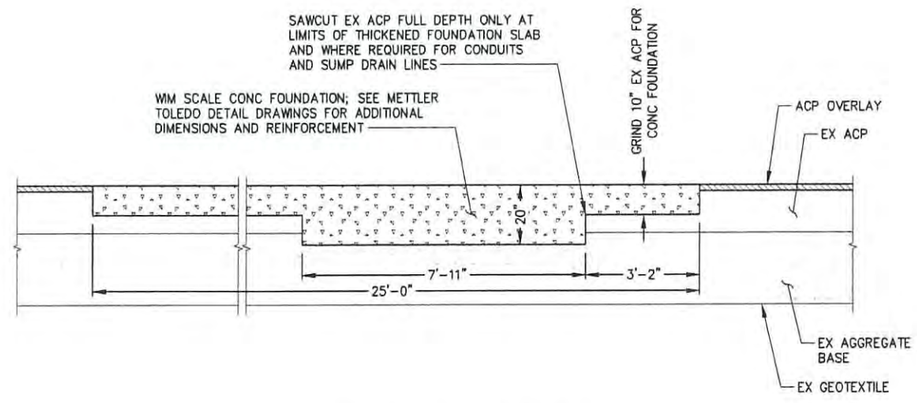

B C2.03 **WIM SCALE SECTION**
SCALE: NTS

1'-0" 0'-0" 1'-0" 2'-0"
SCALE: 1"=1'-0"

PERMIT SET
ISSUED: 2019-11-19

CALL 2 DAYS BEFORE YOU DIG 1-800-424-5555

BINDING EDGE

PORT OF TACOMA FILE: Q:\LB\88897-07\CADD_Active_SheetSet\889707-C03.04

MARK:	REVISION:	BY:	APPR:	DATE:

moffatt & nichol
600 UNIVERSITY STREET SUITE# 610 SEATTLE, WA 98101 (206) 622-0222

S. GRAY — 11/19/19
CHECKED BY — DATE
B. HALEY — 11/19/19
PROJ. ENGR — DATE
PRINTED BY: BHaley Nov 21, 2019
SITE ADDRESS: 1754 THORNE RD TACOMA, WA 98421

LOT F REDEVELOPMENT
HUSKY PROCESSING LANES
DETAILS - FOUNDATIONS

TOWNSHIP: 21N | RANGE: 3E | SECTION: 34
DAT-HRZ: WA83/2011-SF | VERT: MLLW
PHASE: PERMIT SET | PARCEL: LOT F | DRAWING SCALE: AS NOTED

C3.04
29 OF 59

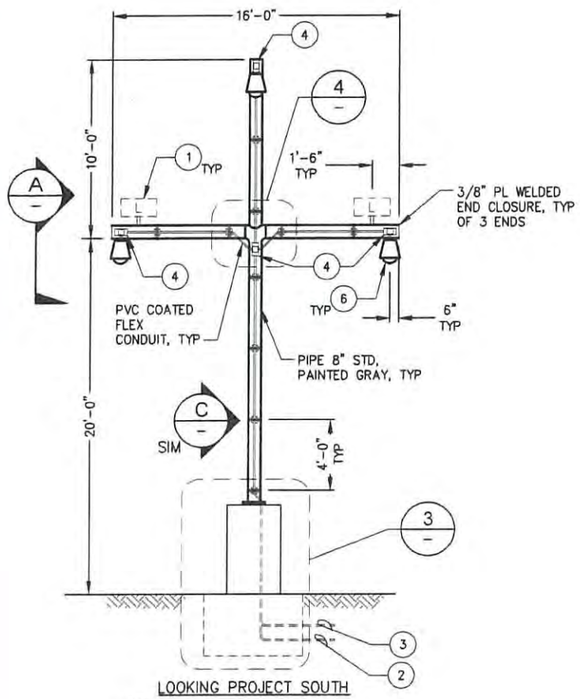

1 T-POLE DETAIL
SCALE: 1/4" = 1'-0"

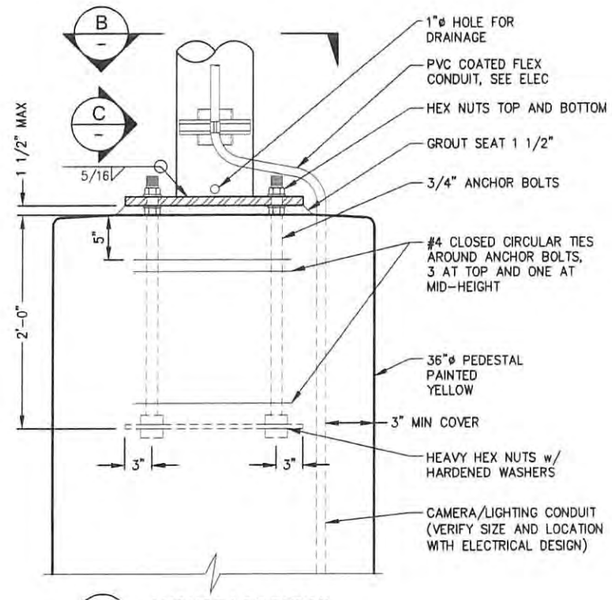

2 ANCHORAGE DETAIL
SCALE: 1 1/2" = 1'-0"

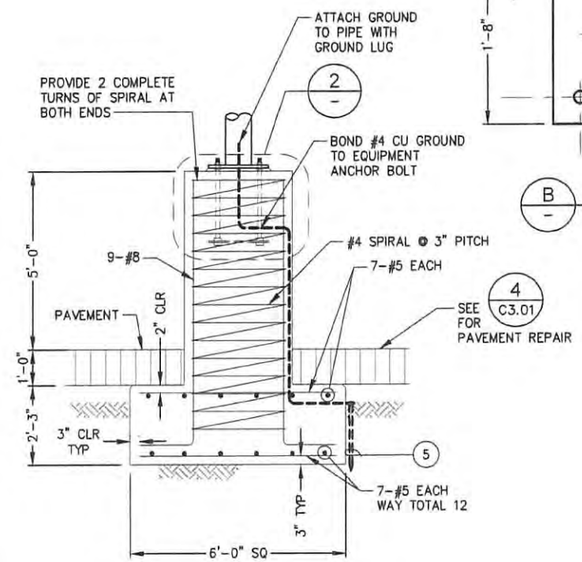

3 SPREAD FOOTING SECTION
SCALE: 1/2" = 1'-0"

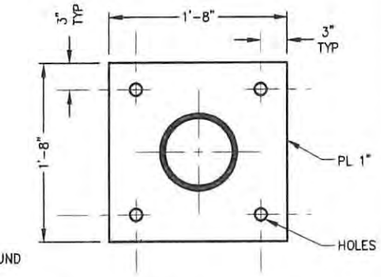

B BASE PLATE DETAIL
SCALE: 3" = 1'-0"

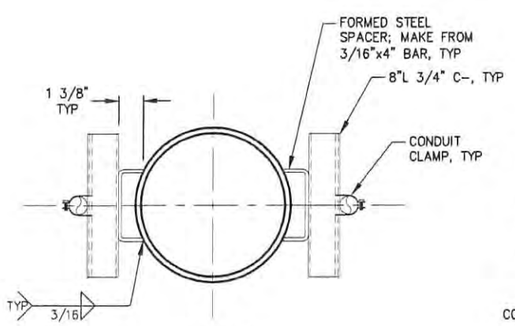

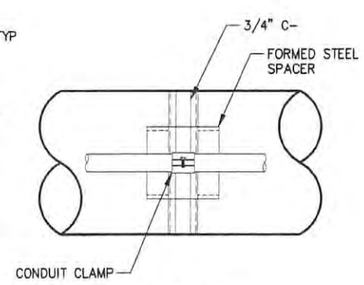

A UNISTRUT MOUNT DETAIL
SCALE: 3" = 1'-0"

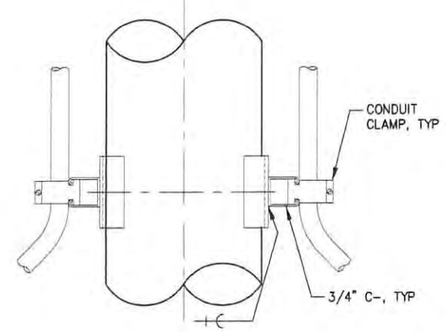

C UNISTRUT MOUNT ELEVATION
SCALE: 3" = 1'-0"

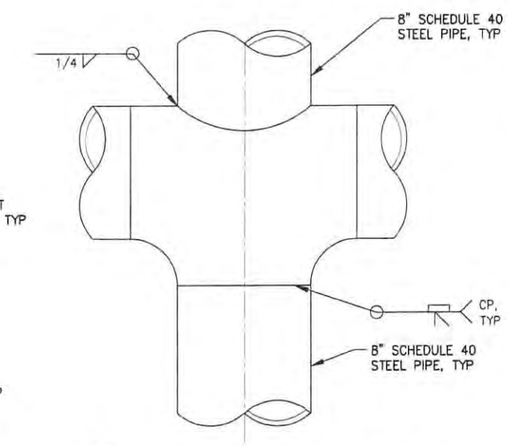

4 T-POLE CONNECTION DETAIL
SCALE: 3" = 1'-0"

KEY NOTES:

1. T-POLE FLOOD LIGHT FIXTURE MOUNTED TO J-BOX, SEE ELECTRICAL PLANS
2. CCTV CAMERA CONDUIT SHALL BE PVC COATED RIGID STEEL WHERE EXPOSED (INSTALLED ON PROJECT NORTH SIDE).
3. LIGHTING CONDUIT SHALL BE PVC COATED RIGID STEEL WHERE EXPOSED (INSTALLED ON PROJECT SOUTH SIDE).
4. APPLETON RSM CAST BOX OR EQUIVALENT
5. 3/4"ø x 10' COPPER GROUND ROD
6. DOME CAMERA (BY OTHERS)

6" 0'-0" 3" 6"
SCALE: 3"=1'-0"

1'-0" 0'-0" 6" 1'-0"
SCALE: 1 1/2"=1'-0"

2'-0" 0'-0" 2'-0" 4'-0"
SCALE: 1/2"=1'-0"

4'-0" 0'-0" 4'-0" 8'-0"
SCALE: 1/4"=1'-0"

PERMIT SET
ISSUED: 2019-11-19

WSDOT
Husky
600 UNIVERSITY STREET
SUITE# 610
SEATTLE, WA 98101
(206) 622-0222
moffatt & nichol

MARK:	REVISION:	BY:	APPR:	DATE:

S. GRAY 11/19/19 DATE
CHECKED BY 11/19/19 DATE
B. HALEY
PROJ. ENGR

LOT F REDEVELOPMENT
HUSKY PROCESSING LANES
DETAILS - CAMERA POLES

TOWNSHIP: 21N | RANGE: 3E | SECTION: 34
DAT-HRZ: WA83/2011-SF | VERT: MLLW
PHASE: PERMIT SET | PARCEL: LOT F | DRAWING SCALE: AS NOTED

PRINTED BY: BHaley Nov 21, 2019
SITE ADDRESS: 1754 THORNE RD
TACOMA, WA 98421

C3.05
30 OF 59

BINDING EDGE

PORT OF TACOMA FILE: Q:\LB\8897-07\CADD_Active_SheetSet\889707-C03.05

1 / – REPRESENTATIVE SHELTER
SCALE: NTS

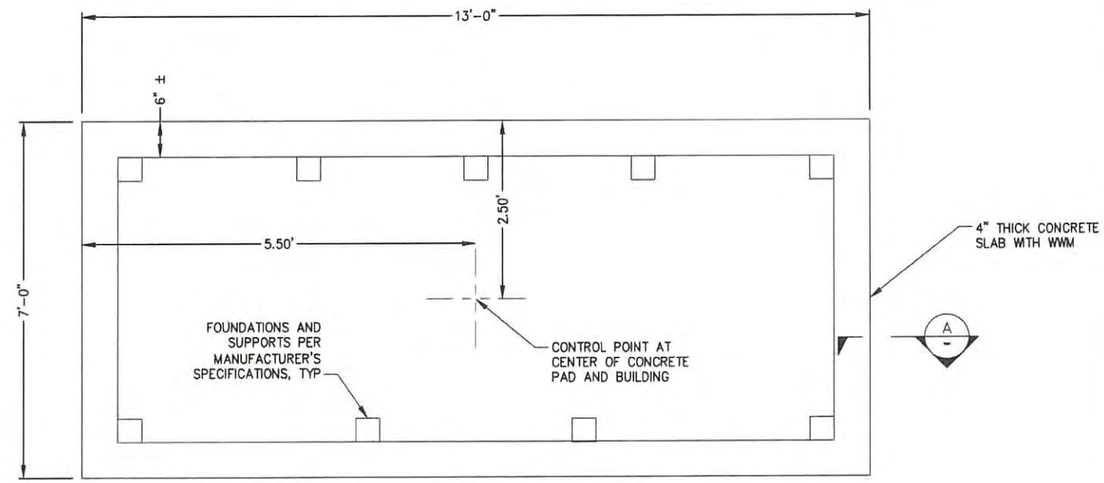

2 / C2.05 DRIVER ASSISTANCE SHELTER SCHEMATIC LAYOUT
SCALE: NTS

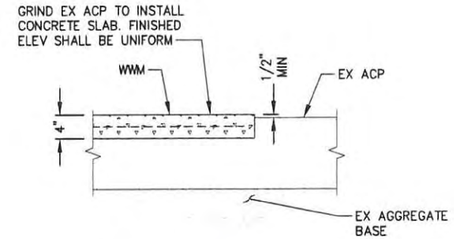

A / – SLAB SECTION
SCALE: 1" = 1'-0"

NOTES:

1. CONTRACTOR SHALL CONSTRUCT NEW 4" THICK CONCRETE SLAB AND SHALL INSTALL OWNER PROVIDED SHELTER.
2. CONTRACTOR SHALL CONSTRUCT SLAB WITH (12) 1/2"x4" EXPANSION BOLTS AS SPECIFIED BY THE MANUFACTURER.

CALL 2 DAYS
BEFORE YOU DIG
1-800-424-5555

PERMIT SET
ISSUED: 2019-11-19

BINDING EDGE

PORT OF TACOMA FILE: Q:\LB\8897-07\CADD_Active_SheetSet\889707-C03.06

husky

moffatt & nichol
600 UNIVERSITY STREET
SUITE# 610
SEATTLE, WA 98101
(206) 622-0222

MARK:	REVISION:	BY:	APPR:	DATE:

HALEY
WASHINGTON
STATE OF
BRIAN
PROFESSIONAL ENGINEER

		DATE
S. GRAY	CHECKED BY	11/19/19
B. HALEY	PROJ. ENGR	11/19/19
	PRINTED BY:	BHaley Nov 21, 2019
	SITE ADDRESS:	1754 THORNE RD TACOMA, WA 98421

LOT F REDEVELOPMENT
HUSKY PROCESSING LANES
DETAILS - DRIVER ASSISTANCE SHELTER

TOWNSHIP: 21N	RANGE: 3E	SECTION: 34	
DAT-HRZ: WAB3/2011-SF	VERT: MLLW		
PHASE: PERMIT SET	PARCEL: LOT F	DRAWING SCALE:	AS NOTED

C3.06
31 OF 69

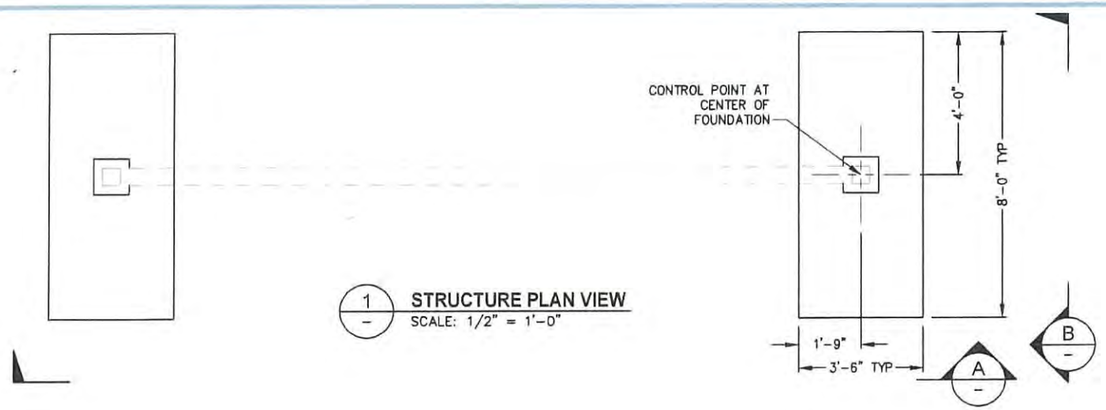

1 STRUCTURE PLAN VIEW
SCALE: 1/2" = 1'-0"

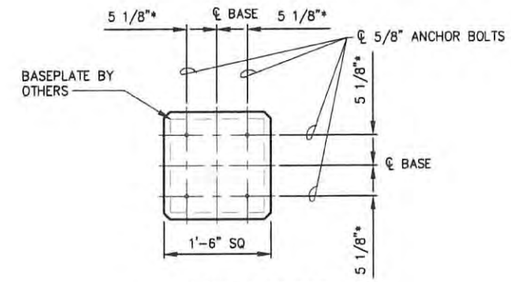

* CONFIRM DIMENSIONS w/ OCR VENDOR. COORDINATE ANCHOR BOLT SETTING TEMPLATE w/ VENDOR.

3 DETAIL
SCALE: 1" = 1'-0"

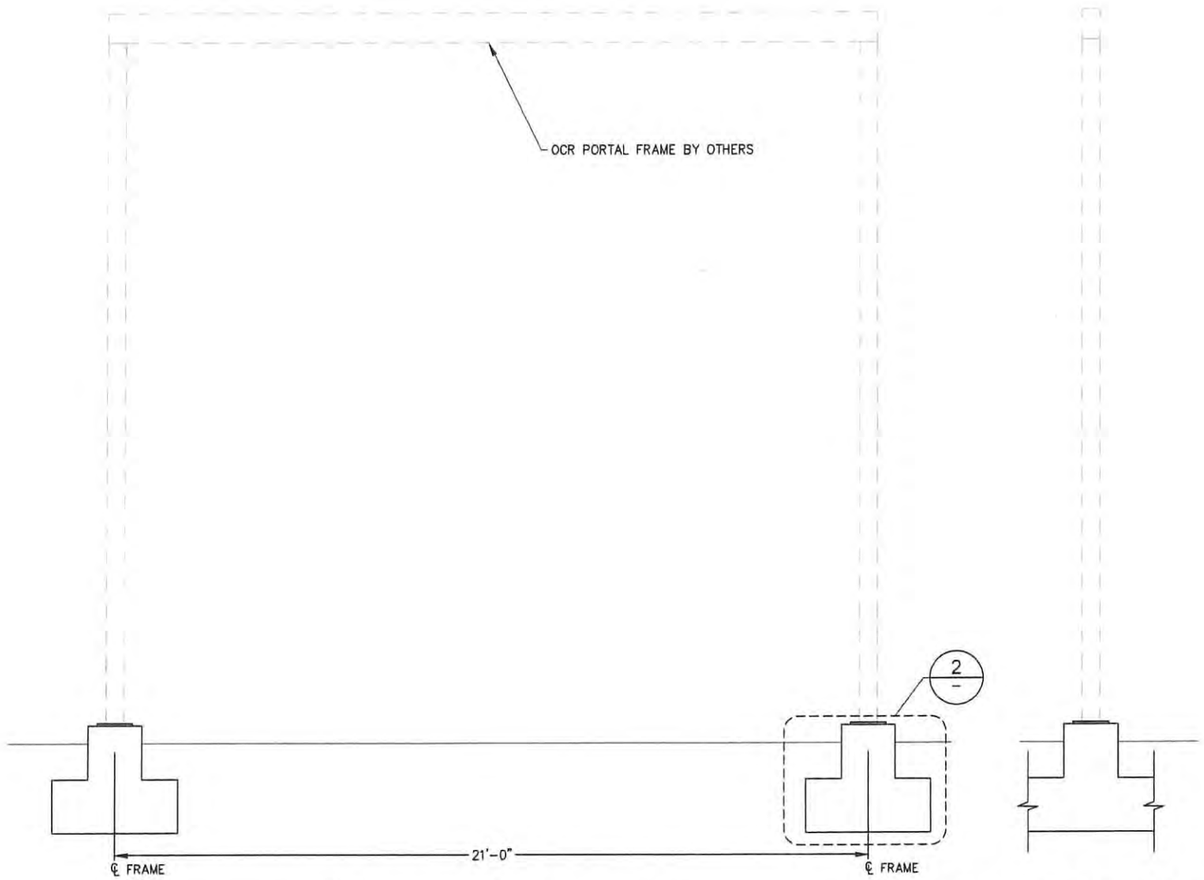

A STRUCTURE FRONT ELEVATION
SCALE: 1/2" = 1'-0"

B STRUCTURE SIDE ELEVATION
SCALE: 1/2" = 1'-0"

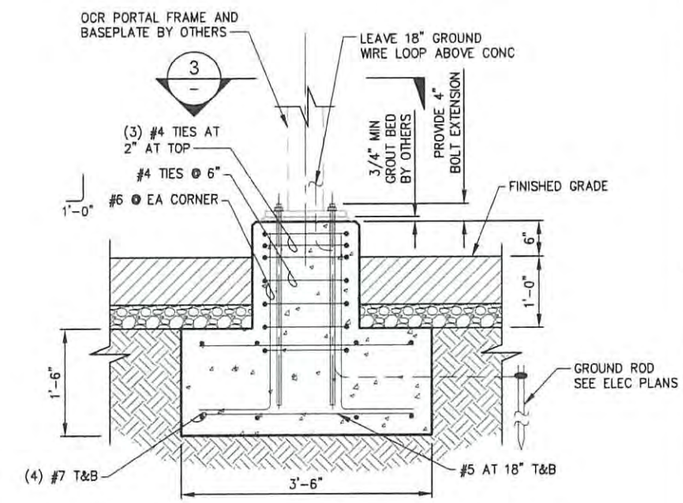

2 DETAIL - OCR PORTAL FOUNDATION
SCALE: 1" = 1'-0"

2'-0" 0'-0" 2'-0" 4'-0"
SCALE: 1/2"=1'-0"

1' 0' 1' 2'
SCALE: 1"=1'

PERMIT SET
ISSUED: 2019-11-19

CALL 2 DAYS
BEFORE YOU DIG
1-800-424-5555

BINDING EDGE

PORT OF TACOMA FILE: Q:\LB\8897-07\CADD_Active_SheetSet\689707-C03.07

MARK:	REVISION:	BY:	APPR:	DATE:

moffatt & nichol
600 UNIVERSITY STREET
SUITE # 910
SEATTLE, WA 98101
(206) 622-0222

S. GRAY — DATE 11/19/19
CHECKED BY B. HALEY — DATE 11/19/19
PROJ. ENGR.
PRINTED BY: BHaley Nov 21, 2019
SITE ADDRESS: 1754 THORNE RD
TACOMA, WA 98421

LOT F REDEVELOPMENT
HUSKY PROCESSING LANES
DETAILS - OCR FOUNDATIONS

TOWNSHIP: 21N | RANGE: 3E | SECTION: 34
DAT-HRZ: WA83/2011-SF | VERT: MLLW
PHASE: PERMIT SET | PARCEL: LOT F | DRAWING SCALE: AS NOTED

C3.07
32 OF 59

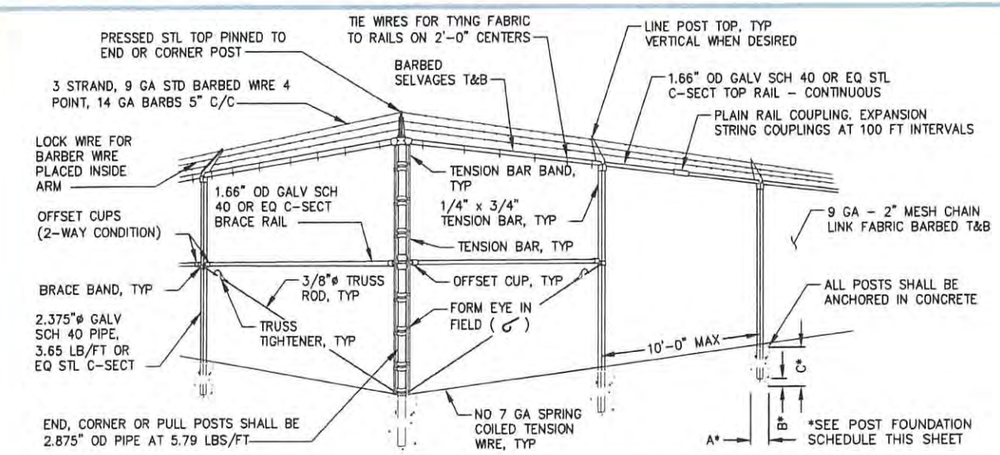

1 TYPICAL FENCE PERSPECTIVE
SCALE: NTS

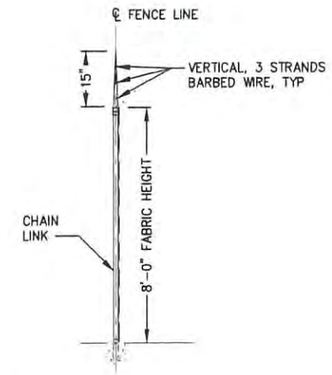

2 TYPICAL FENCE SECTION
SCALE: NTS

POST FOUNDATION DIMENSIONS AND REINFORCEMENT SCHEDULE

LOCATION	A	B	C	STEEL REINF AND NOTES
FENCE, MAN GATE, AND TURNSTILE POSTS				
LINE	0'-10"	0'-6"	3'-0"	NONE
CORNER/END	1'-0"	0'-6"	3'-6"	NONE
PEDESTRIAN ACCESS GATE HINGE POST	1'-4"	0'-6"	3'-6"	NONE
DOUBLE LEAF SWING GATE POST	2'-0"	0'-6"	6'-0"	SEE NOTE A
DOUBLE LEAF SLIDING GATE POLE	CONTRACTOR DESIGNED			

A. PROVIDE 8 EQUALLY SPACED VERTICAL #6 BARS AND HORIZONTAL #4 TIES AT 6" ON CENTER. ADJUST REINF LENGTH TO MATCH SPECIFIED FOUNDATION DIAMETER AND DEPTH.

3 POST FOUNDATION DIMENSION
SCALE: NTS

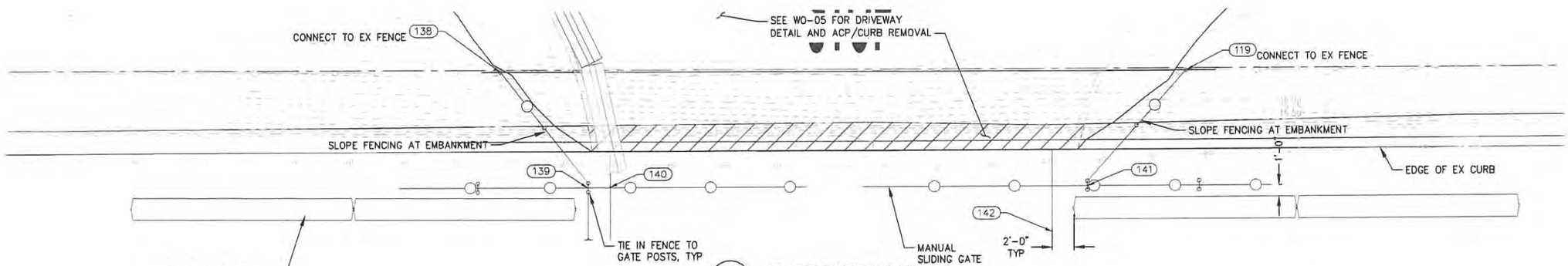

4 GATE ENLARGE PLAN
SCALE: 1" = 5'-0"

NOTES:

1. ALL FENCE AND GATE FABRIC, FRAMEWORK, FITTINGS, TIES, POSTS AND BARBED WIRE SHALL BE GALVANIZED AND PVC COATED, COLOR BLACK.

LEGEND:

ACP OVERLAY

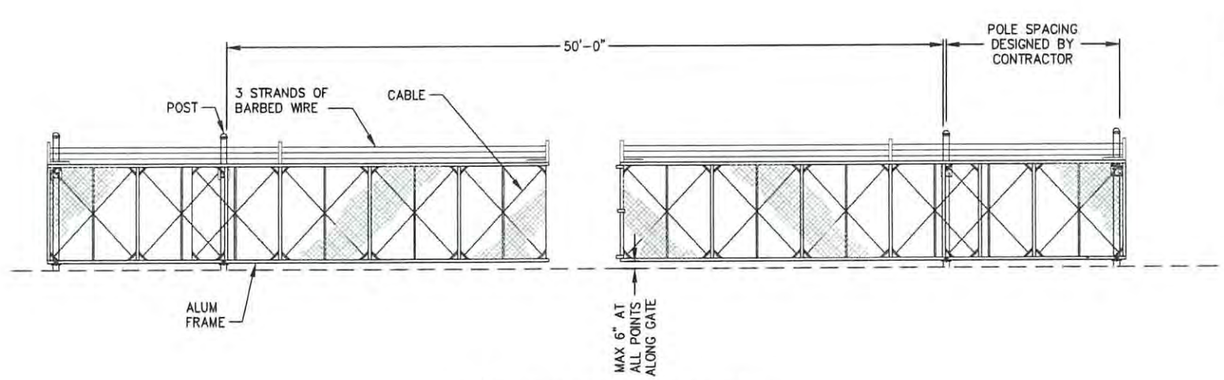

5 SLIDING GATE ELEVATION
SCALE: 1" = 5'

CALL 2 DAYS BEFORE YOU DIG 1-800-424-5555

PERMIT SET
ISSUED: 2019-11-19

BINDING EDGE

PORT OF TACOMA FILE: O:\LB\8897-07\CADD_Active_SheetSet\889707-C03.08

LOT F REDEVELOPMENT
HUSKY PROCESSING LANES
DETAILS - FENCING & SLIDING GATE

C3.08
33 OF 69

S. GRAY 11/19/19
CHECKED BY
B. HALEY 11/19/19
PROJ. ENGR
PRINTED BY: BHaley Nov 21, 2019
SITE ADDRESS: 1754 THORNE RD TACOMA, WA 98421

TOWNSHIP: 21N | RANGE: 3E | SECTION: 34
DAT-HRZ: WABS/2011-SF | VERT: MLLW
PHASE: PERMIT SET | PARCEL: LOT F | DRAWING SCALE: AS NOTED

MARK: | REVISION: | BY: | APPR: | DATE:

moffatt & nichol 600 UNIVERSITY STREET SUITE# 610 SEATTLE, WA 98101 (206) 622-0222

husky

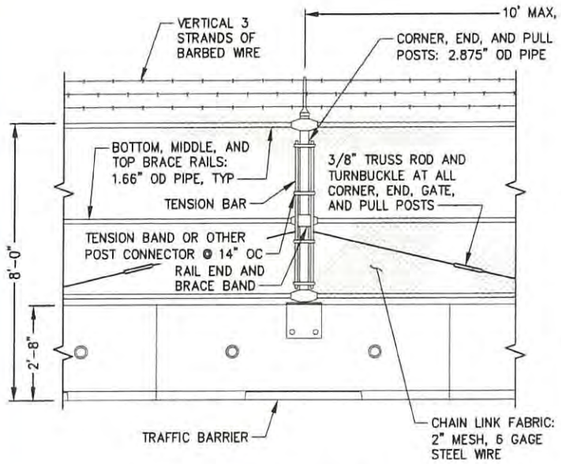

TERMINAL POST DETAIL

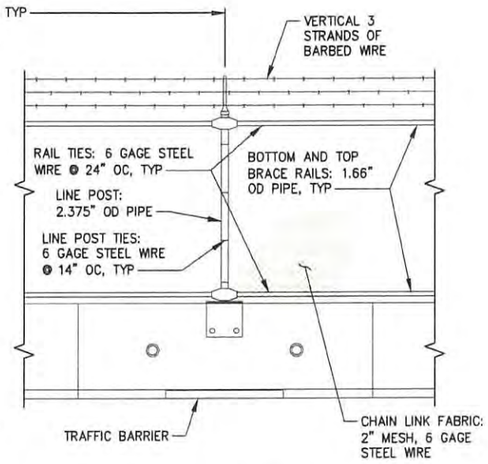

LINE POST DETAIL

1 / – BARRIER MOUNTED SECURITY FENCE
C2.01, C2.02, C2.03, C2.04
SCALE: 1/2" = 1'-0"

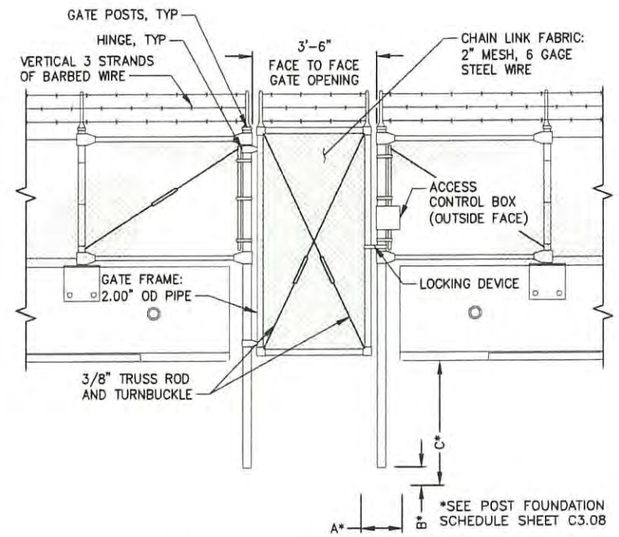

2 / C2.02 PEDESTRIAN ACCESS GATE
C2.03
SCALE: 1/2" = 1'-0"

NOTES

1. TOP OF THE FENCE SHALL PRESENT A SMOOTH LINE PARALLEL TO FINISHED GROUND LEVELS, WITH NO DISCERNIBLE DIPS, HUMPS, OR SUDDEN DIFFERENCES IN ALIGNMENT.
2. STRAINING (PULL) POSTS SHALL BE PROVIDED AT ALL ENDS AND CORNERS OF THE FENCE, AT CHANGES OF DIRECTION, AND AT INTERVALS NOT EXCEEDING 98'-5" (30m) ON STRAIGHT LENGTHS OF FENCE.
3. ALL FENCE AND GATE FABRIC, FRAMEWORK, FITTINGS, TIES, POSTS AND BARBED WIRE SHALL BE GALVANIZED AND PVC COATED, COLOR BLACK.

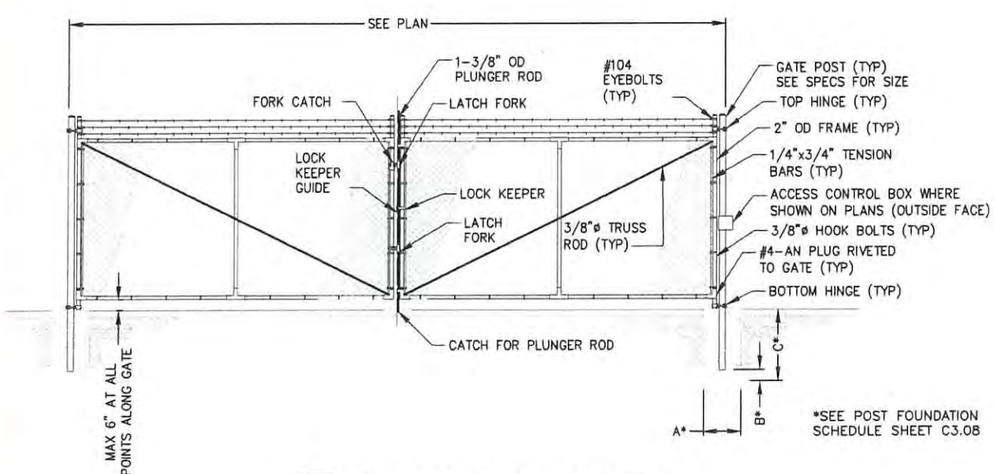

3 / C2.02 DOUBLE LEAF SWING GATE DETAIL
C2.03
SCALE: NTS

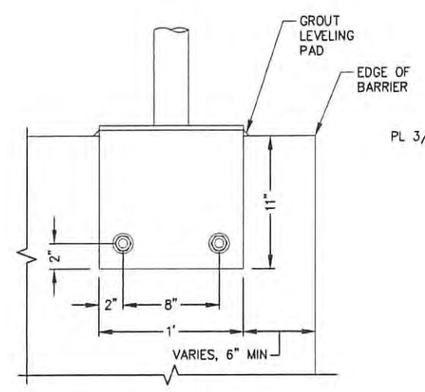

SIDE VIEW

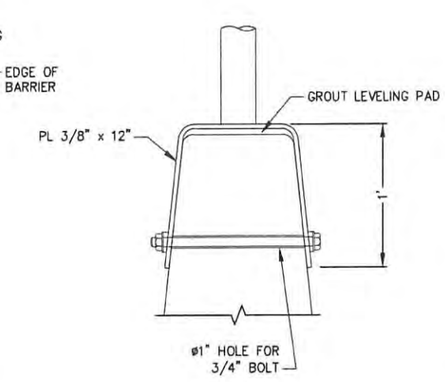

END VIEW

4 / – FENCE POST SADDLE
SCALE: 2" = 1'-0"

2'-0" 0'-0" 2'-0" 4'-0"
SCALE: 1/2"=1'-0"

6" 0'-0" 6" 1'-0"
SCALE: 2"=1'-0"

PERMIT SET
ISSUED: 2019-11-19

CALL 2 DAYS BEFORE YOU DIG 1-800-424-5555

BINDING EDGE

PORT OF TACOMA FILE: Q:\LB\8897-07\CADD_Active_SheetSet\889707-C03.09

MARK:	REVISION:	BY:	APPR:	DATE:

moffatt & nichol
600 UNIVERSITY STREET SUITE# 610 SEATTLE, WA 98101 (206) 622-0222

husky

S. GRAY — CHECKED BY
B. HALEY — PROJ. ENGR
11/19/19 — DATE
11/19/19 — DATE

PRINTED BY: BHaley Nov 21, 2019
SITE ADDRESS: 1754 THORNE RD TACOMA, WA 98421

LOT F REDEVELOPMENT
HUSKY PROCESSING LANES
DETAILS - BARRIER MOUNTED FENCE & SWING GATE

TOWNSHIP: 21N | RANGE: 3E | SECTION: 34
DAT-HRZ: WA83/2011-SF | VERT: MLLW
PHASE: PERMIT SET | PARCEL: LOT F | DRAWING SCALE: AS NOTED

C3.09
28 OF 69

BINDING EDGE

NOTES

1. TOP OF THE FENCE SHALL PRESENT A SMOOTH LINE PARALLEL TO FINISHED GROUND LEVELS, WITH NO DISCERNIBLE DIPS, HUMPS, OR SUDDEN DIFFERENCES IN ALIGNMENT.
2. TENSION BARS SHALL BE PROVIDED BOTH SIDES AT EACH CORNER POST.
3. CHAMFER OF CONCRETE BARRIER NOT SHOWN FOR CLARITY.
4. MAXIMUM GAP OF 6" IS ALLOWABLE. FOR SHARPER ANGLES, INTERMEDIATE FENCE CORNERS WILL BE REQUIRED TO MAINTAIN THE MAXIMUM GAP.

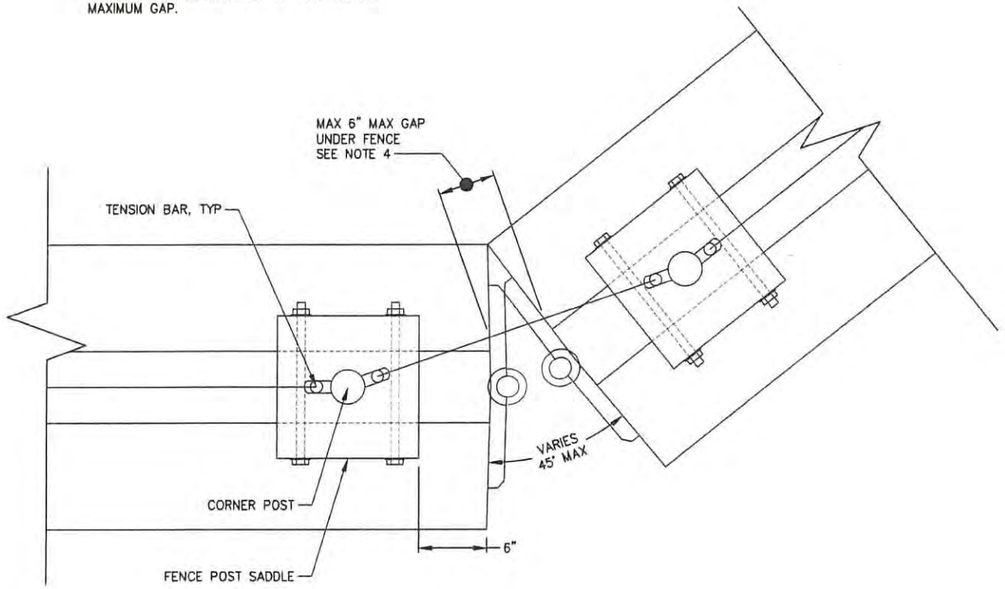

1 / – **FENCE CORNER POST SADDLE**
SCALE: 2" = 1'-0"

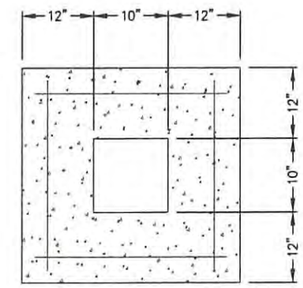

PLAN

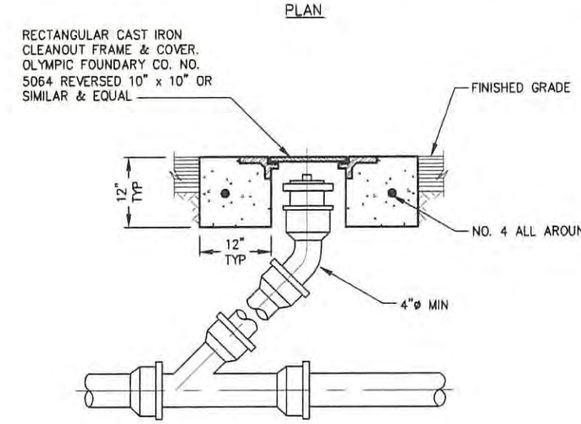

ELEVATION

NOTE:
1. CLEANOUT SHALL BE DESIGNED FOR TOP PICK LOADING.

2 / – **SCALE SUMP CLEANOUT**
C2.01, C2.03
SCALE: NTS

6" 0'-0" 6" 1'-0"
SCALE: 2"=1'-0"

PERMIT SET
ISSUED: 2019-11-19

CALL 2 DAYS
BEFORE YOU DIG
1-800-424-5555

PORT OF TACOMA FILE: Q:\LB\8897-07\CADD_Active_SheetSet\889707-C03.10

MARK:	REVISION:	BY:	APPR:	DATE:

moffatt & nichol
600 UNIVERSITY STREET
SUITE# 610
SEATTLE, WA 98101
(206) 622-0222

HALEY & ALDRICH

		DATE
S. GRAY	DRAWN BY:	11/19/19
B. HALEY	CHECKED BY	11/19/19
	PROJ. ENGR	DATE
	PRINTED BY:	BHaley Nov 21, 2019
	SITE ADDRESS:	1754 THORNE RD TACOMA, WA 98421

LOT F REDEVELOPMENT
HUSKY PROCESSING LANES
DETAILS - MISCELLANEOUS

TOWNSHIP: 21N	RANGE: 3E	SECTION: 34	
DAT-HRZ: WA83/2011-SF	VERT: MLLW		
PHASE: PERMIT SET	PARCEL: LOT F	DRAWING SCALE: AS NOTED	

C3.10
28 OF 59

BINDING EDGE

GENERAL NOTES:

1. DO NOT SCALE ELECTRICAL DRAWINGS. REFER TO CIVIL AND STRUCTURAL DRAWINGS TO COORDINATE THE EXACT LOCATION OF ALL ELECTRICAL EQUIPMENT, STRUCTURES, VAULTS, CONDUITS, ETC. NOTIFY ENGINEER IN THE EVENT OF A CONFLICT.
2. SEE DRAWING E10 AND E11 FOR CONDUIT AND CONDUCTOR SCHEDULE. NOT ALL CONDUIT AND CONDUCTORS ARE INDICATED ON THE SCHEDULES. SEE SITE PLANS AND DETAILS FOR ADDITIONAL CONDUIT AND CONDUCTOR REQUIREMENTS. METALLIC CONDUITS, COUPLINGS AND JOINTS OF METALLIC CONDUITS EMBEDDED IN CONCRETE, CDF, EARTH OR ASPHALT SHALL BE 1/2 LAP TAPED OR OTHERWISE MADE WATERTIGHT TO PREVENT INTRUSION OF MORTAR, WATER OR OTHER MATERIALS. TEST CONDUIT FOR ABSENCE OF ANY BLOCKAGE PRIOR TO AND WITHIN 24 HOURS OF COMPLETING A CONCRETE OR CDF POUR OR ASPHALT PAVING. ALL METAL CONDUIT EXPOSED ABOVE GRADE SHALL BE PVC COATED OR PRIMED AND PAINTED TWO(2) COATS BLACK OVER GALVANIZE.
3. CONTRACTOR SHALL INCLUDE IN THE BID ALL COSTS TO HAVE A DEPARTMENT OF LABOR AND INDUSTRIES APPROVED FIRM TO FIELD EVALUATE THE INSTALLATION, SAFETY, AND COMPLIANCE REQUIRED PER TACOMA POWER ELECTRICAL INSPECTION AND/OR PER W.A.C. 296-46B-901 FOR ANY EQUIPMENT SPECIFIED OR FURNISHED NOT UL LABELED.
4. THERE IS ADDITIONAL ELECTRICAL WORK SHOWN ON THE CIVIL AND STRUCTURAL DRAWINGS AND DESCRIBED IN THE SPECIFICATIONS. EXTENSIVE COORDINATION IS REQUIRED BY THE CONTRACTOR WITH GOVERNING AUTHORITIES, OTHER CONTRACTORS WORKING ON SITE, POT, AND POT TENANTS. CONTRACTOR SHALL REVIEW ALL DRAWINGS AND SPECIFICATION SECTIONS AND INCLUDE COSTS FOR ALL COORDINATION AND RELATED WORK IN THE BID.
5. EXCAVATIONS IN EXISTING ASPHALT AREAS FOR POWER AND COMMUNICATIONS WORK. THE CONTRACTOR SHALL SAWCUT, EXCAVATE, HAND DIG, BACKFILL, COMPACT AND PATCH ASPHALT PER THE SPECIFICATIONS. LIMITS OF PAVEMENT DEMOLITION AND RESTORATION SHALL BE AS REQUIRED BY CIVIL AND TO SAFELY PERFORM THE POWER AND COMMUNICATIONS INSTALLATIONS. PAVEMENT PATCHING SHALL BE PER CIVIL/ STRUCTURAL REQUIREMENTS.
6. SEE CIVIL DRAWINGS FOR LIMITS OF CAP, SITE EQUIPMENT DEMOLITION, EXISTING AND NEW BELOW GRADE UTILITIES. CONTRACTOR SHALL FIELD COORDINATE EXISTING UTILITIES, UNDERGROUND WORK BY OTHER CONTRACTORS WITH ROUTING OF NEW ELECTRICAL UNDERGROUND INFRASTRUCTURE. CALL FOR, IDENTIFY AND MAINTAIN EXISTING UTILITY LOCATES PRIOR TO ANY EXCAVATIONS.
7. THIS PROJECT WILL HAVE MULTIPLE CONTRACTORS WORKING ON THE SAME SITE TO ACCOMPLISH A COMPLETED PROJECT. CONTRACTOR WILL BE REQUIRED TO SCHEDULE AND COORDINATE WITH ITS/ HUSKY COMMUNICATION EQUIPMENT CONTRACTOR, PORT OF TACOMA MAINTENANCE PERSONNEL, POT OF TACOMA IT STAFF AND WUT TERMINAL TENANT.
8. CONTRACTOR SHALL PROVIDE PULL TAPE IN ALL CONDUIT RUNS WITH CONDUCTORS, COMMUNICATIONS CABLES OR EMPTY. PROVIDE COMPLETE LOOP OF ALL POWER AND COMMUNICATIONS CABLES AROUND ALL FOUR(4) WALLS OF VAULTS PRIOR TO CABLE EXITING VAULT. FOR POWER CONDUCTORS UPSIZED TO REDUCE VOLTAGE DROP AND LARGER THAN TERMINATION LUGS CONTRACTOR SHALL PROVIDE TERMINAL PINS (FINGER SPLICES) TO ACCOMMODATE TERMINATION.

SYMBOLS LEGEND:

- XXXX — BURIED POWER/ COMMUNICATIONS CONDUITS IN SHARED TRENCH. SEE CONDUIT AND WIRE SCHEDULE SHEET E10 AND E11.
- PV / CV — POWER VAULT(PV) AND COMMUNICATION VAULT(CV). 125KIP RATING. SEE VAULT SCHEDULE SHEET E12.
- ELECTRICAL POWER PANEL.
- DUPLEX 120V, 20A. WP = GFI RECEPTACLE IN NEMA 3R CAST BOX WITH "IN USE" NEMA 3R COVER.
- GROUND PER NEC
- EQUIPMENT CONNECTION. PROVIDE PER NEC AND MANUFACTURER'S REQUIREMENTS AND/OR RECOMMENDATIONS.
- J — CAST JUNCTION BOX
- PX — WOOD LIGHTING POLE WITH MULTIPLE LIGHT FIXTURES. SUBSCRIPT PX IDENTIFIES POLE #.
- XXX — AVAILABLE FAULT CURRENT.
- A/B — DETAIL/SECTION IDENTIFICATION: A = DETAIL/SECTION LETTER, B = SHEET NUMBER WHERE DETAIL/SECTION IS TAKEN FROM OR DRAWN.
- EXISTING(E)
- EXISTING TO BE REMOVED
- NEW(N)

ABBREVIATION LEGEND:

A	=	AMPS
AFG	=	ABOVE FINISHED GRADE
AIC	=	FAULT CURRENT RATING
BP	=	EXISTING BURIED POWER
BPO	=	EXISTING BURIED FIBER
C	=	COMMUNICATIONS
CDF	=	CONTROLLED DENSITY FILL
CKT	=	CIRCUIT
CO	=	CONDUIT ONLY
CV	=	COMMUNICATIONS VAULT
E	=	EXISTING
FT	=	FEET
GRD	=	GROUND
HMA	=	HOT MIX ASPHALT
ID	=	IDENTIFICATION
N	=	NEW
NEC	=	NATIONAL ELECTRICAL CODE
NEMA	=	NATIONAL ELECTRICAL MANUFACTURER'S ASSOCIATION
NIC	=	NOT IN CONTRACT
PV	=	POWER VAULT
POT	=	PORT OF TACOMA ENGINEER
POTM	=	PORT OF TACOMA FACILITIES MAINENANCE
POTIT	=	POT OF TACOMA INFORMATION TECHNOLOGY DEPARTMENT
PVCRS	=	PVC COATED RIGID STEEL CONDUIT OR OTHER EQUIPMENT AS NOTED
TPU	=	TACOMA POWER UTILITIES
WAC	=	WASHINGTON ADMINISTRATIVE CODE
WP	=	WEATHERPROOF
WPC	=	WHERE-PORT COMMUNICATIONS

CROSS ENGINEERS, INC
922 MLK Jr. Way
Tacoma, WA 98405
info@crossenginseers.com
Phone: (253) 759-0118
Job Number: 19-032

PORT OF TACOMA FILE: N:\Jobs\2018\18-032\Dwgs\18-032-E1

moffatt & nichol
600 UNIVERSITY STREET
SUITE 610
SEATTLE, WA 98101
(206) 622-0222

MARK:	REVISION:	BY:	APPR:	DATE:

CHECKED BY DATE

PROJ. ENGR. DATE

PRINTED BY: ScotK Nov 20, 2019

SITE ADDRESS: 1281 PIER G WAY
LONG BEACH, CA 90802

LOT F REDEVELOPMENT
HUSKY PROCESSING LANES
ELECTRICAL SYMBOLS/ ABBREVIATION LEGEND
AND GENERAL NOTES

TOWNSHIP: 21N | RANGE: 3E | SECTION: 34
DAT-HRZ: WA83/2011 | ASRT: MLLW 19.18' @ TIDE 22 1933
PARCEL: N/A | DRAWING SCALE: AS NOTED

PHASE: 90% DESIGN

E1
36 OF 59

THIS DRAWING IS THE PROPERTY OF THE PORT OF TACOMA AND SHALL NOT BE USED ON OTHER WORK, DISCLOSED, COPIED, IN WHOLE OR IN PART, WITHOUT WRITTEN PERMISSION

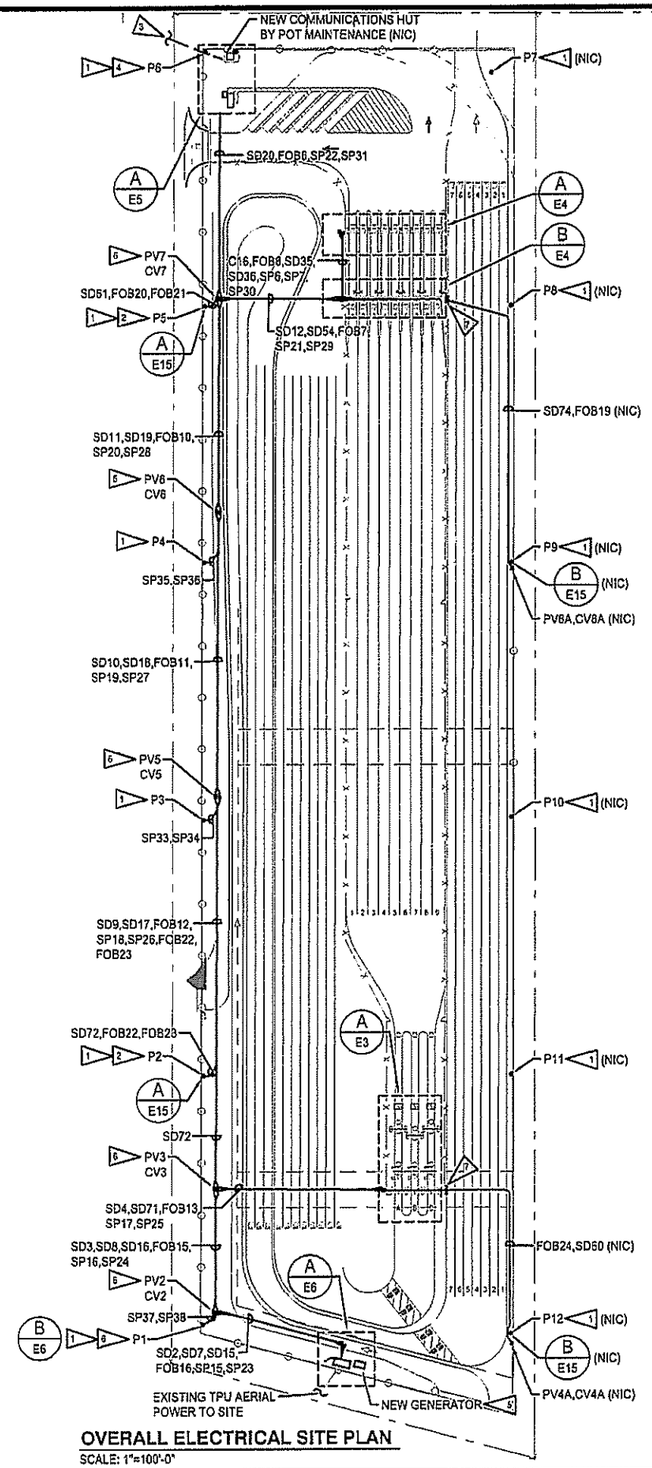

OVERALL ELECTRICAL SITE PLAN

SCALE: 1"=100'-0"

GENERAL NOTES:

1. SEE SHEET E1 FOR GENERAL NOTES.

ELECTRICAL NOTES:

1. SEE SHEET E8.
2. SECURITY CAMERA, RFID ANTENNAS, POT COMMUNICATION BOX, ITS/HUSKY COMMUNICATION BOX AND UNIT SUB LOCATION. SEE DETAIL A/E15.
3. AERIAL FO CABLE TO HUT (NIC).
4. ITS/HUSKY SECURITY CAMERAS(2) AND ACCESS POINT(1) SUPPLIED BY ITS/HUSKY AND INSTALLED BY CONTRACTOR. POWER AND COMMUNICATIONS WIRING REQUIREMENTS IN CONDUIT FROM HUT BY CONTRACTOR.
5. PROVIDE GENERATOR. NEMA 3R, STAND-BY GENERATOR WITH DIESEL FUEL, 48 HOUR BELLY TANK, 300KW (375KVA), 480V, 3PH, 4W SERVING AS BACK UP TO SITE ELECTRICAL SERVICE.
6. ITS/HUSKY SECURITY CAMERA SUPPLIED BY ITS/HUSKY AND INSTALLED BY CONTRACTOR. POWER AND COMMUNICATIONS WIRING REQUIREMENTS IN CONDUIT FROM UNIT SUB AND ITS/HUSKY COMMUNICATIONS CABINET AT P2 BY CONTRACTOR.
7. EXTENSION OF CONDUIT FROM THIS LOCATION TO P9, PANEL 4A AND P12, PANEL 4B BY POT CONTRACTOR. WIRE FROM PANELS 4A AND 4B BY POT CONTRACTOR.

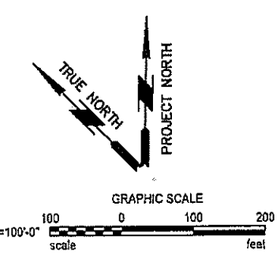

CROSS ENGINEERS, INC
923 MLK Jr. Way
Tacoma WA 98405
info@crossengineers.com
Phone: (253) 759-0118
Job Number: 18-032

moffatt & nichol
600 UNIVERSITY STREET
SUITE# 610
SEATTLE WA 98101
(206) 624-0122

MARK:	REVISION:	BY:	APPR:	DATE:

LOT F REDEVELOPMENT
HUSKY PROCESSING LANES
OVERALL LOT F ELECTRICAL SITE PLAN

CHECKED BY — DATE

PROJ. ENGR — DATE

PRINTED BY: ScottK Nov 20, 2019
SITE ADDRESS: 1281 PIER G WAY
LONG BEACH, CA 90802

TOWNSHIP: 21N | RANGE: 3E | SECTION: 34
DAT–HRZ: WA83/2011 | VERT: MLLW 19.18' @ TIDE 22 1933
DRAWING SCALE: AS NOTED | PARCEL: N/A | PHASE: 90% DESIGN

E2
37 OF 59

THIS DRAWING IS THE PROPERTY OF THE PORT OF TACOMA AND SHALL NOT BE USED ON OTHER WORK, DISCLOSED, COPIED, IN WHOLE OR IN PART, WITHOUT WRITTEN PERMISSION

BINDING EDGE
PORT OF TACOMA FILE: N:\Jobs\2018\18-032\Dwgs\18-032-E2

BINDING EDGE

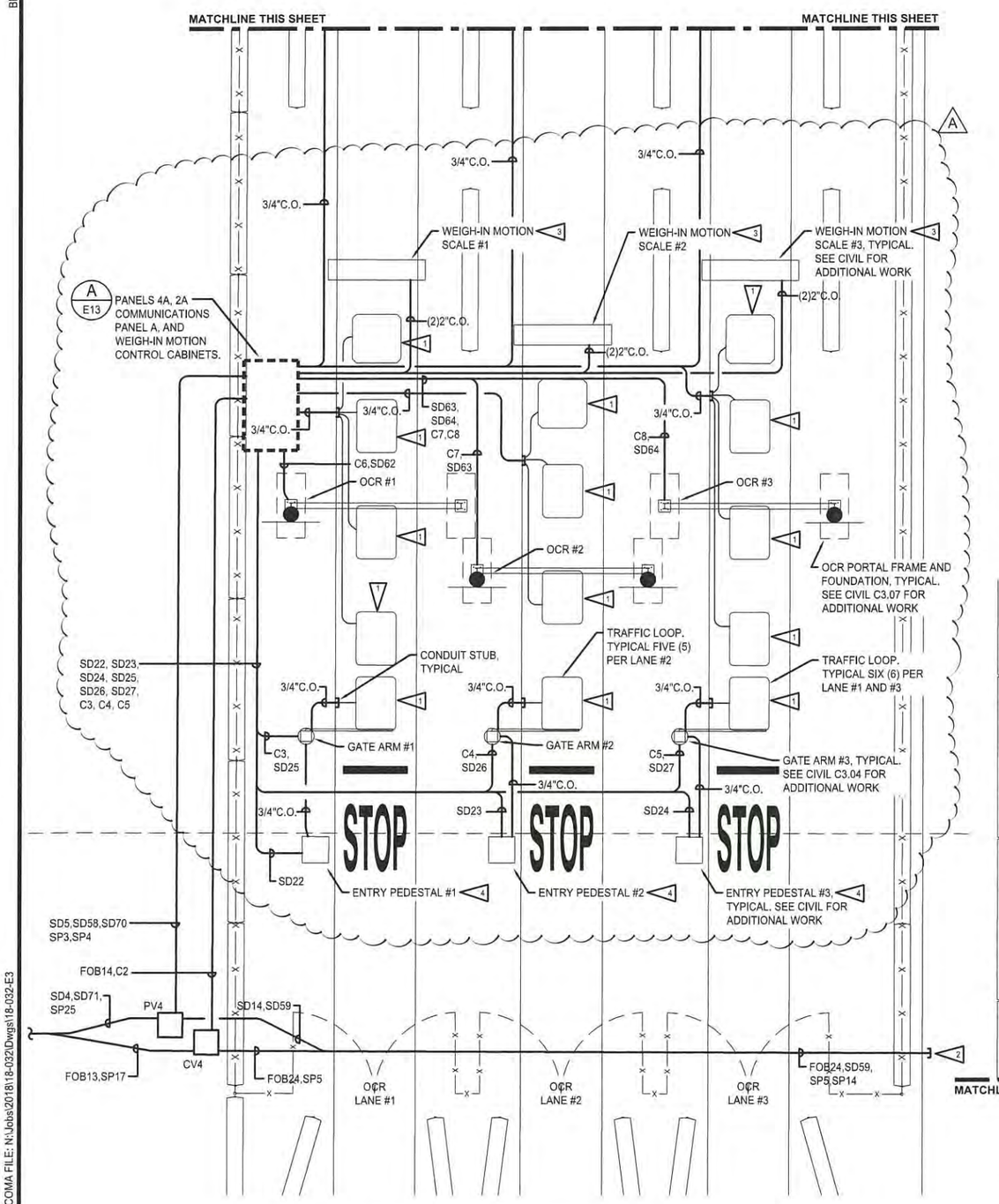

A E3 **PARTIAL ELECTRICAL SITE PLAN**
SCALE: 1/8"=1'-0"

GENERAL NOTES:

1. SEE SHEET E1 FOR GENERAL NOTES.

ELECTRICAL NOTES:

1. SAW CUT ASPHALT AND PROVIDE TRAFFIC LOOP WIRING AS INDICATED PER GATE EQUIPMENT AND OCR EQUIPMENT MANUFACTURER'S SHOP DRAWINGS AND REQUIREMENTS. SEE CIVIL. PROVIDE 3/4" SCHEDULE 80 PVC FOR ALL WIRING OUTSIDE OF TRAFFIC LOOP BACK TO EQUIPMENT AND CONTROL LOCATIONS, FOR GATE ARM AND OCR EQUIPMENT. TACK SEAL SAWCUT AFTER WIRING INSTALLATION. FOAM SEAL CONDUIT STUB.
2. SEE SHEET E2. WIRE FROM PANEL 4A AND CONDUIT EXTENSION BY POT CONTRACTOR. NIC.
3. PROVIDE (2)2"C.O. WITH PULLSTRINGS FROM EACH WEIGH-IN MOTION SCALE TO WEIGH-IN MOTION CONTROL CABINETS. COORDINATE EXACT LOCATION FOR CONDUITS AND TERMINATIONS WITH WEIGH-IN MOTION EQUIPMENT SHOP DRAWINGS. FIELD WIRING BY SCALE PROVIDER.
4. PUSH BUTTON PROVIDED BY GATE ARM EQUIPMENT SUPPLIER. REVIEW SHOP DRAWINGS, PROVIDE FIELD WIRING AND INSTALL PER GATE ARM EQUIPMENT SUPPLIER REQUIREMENTS.
5. TO COMMUNICATIONS CABINET "A".

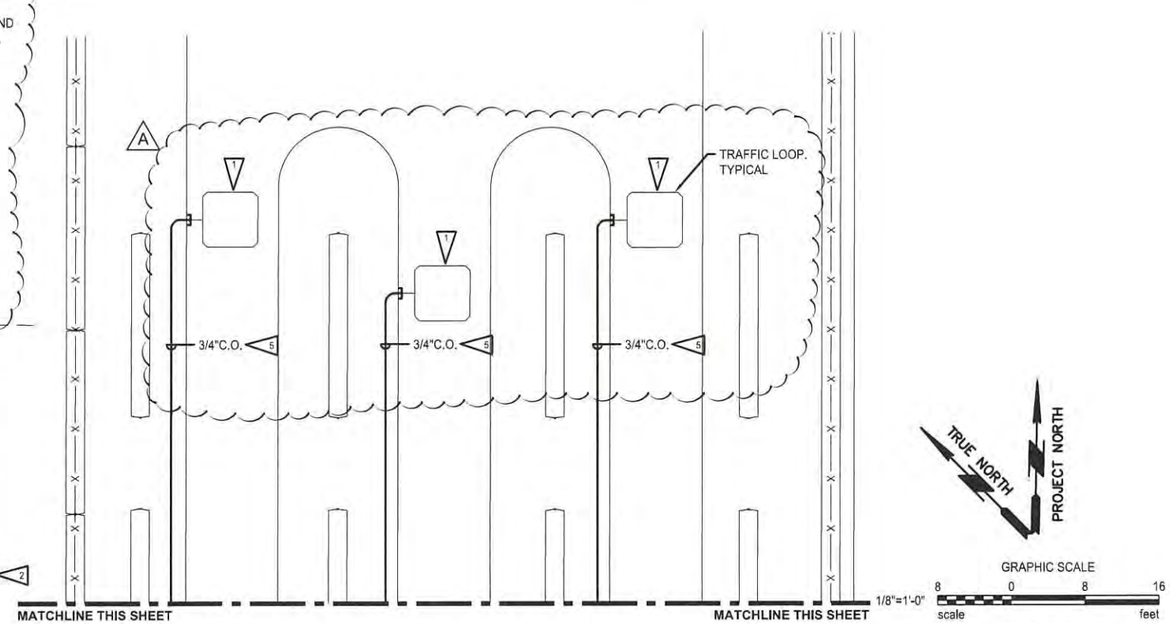

GRAPHIC SCALE
1/8"=1'-0" 8 0 8 16 scale feet

GRAPHIC SCALE
1/4"=1'-0" 4 0 4 8 scale feet

CROSS ENGINEERS, INC
923 MLK Jr. Way
Tacoma WA 98405
info@crossengineers.com
Phone: (253) 759-0118
Job Number: 18-032

MARK:	REVISION:	BY:	APPR:	DATE:
A	ADDENDUM #A	SJK	GLW	12/11/19

moffatt & nichol
600 UNIVERSITY STREET SUITE# 610 SEATTLE, WA 98101 (206) 622-3222

STEVEN L. HUBBS STATE OF WASHINGTON REGISTERED PROFESSIONAL ENGINEER 12/11/19

		DATE
CHECKED BY	SLH	12-02-19
PROJ. ENGR	GLW	12-02-19

PRINTED BY: ScottK Dec 12, 2019
SITE ADDRESS: 1281 PIER G WAY LONG BEACH, CA 90802

LOT F REDEVELOPMENT
HUSKY PROCESSING LANES
PARTIAL ELECTRICAL SITE PLAN

TOWNSHIP: 21N RANGE: 3E SECTION: 34
DAT-HRZ: WA83/2011-NAVD88 VERT: MLLW 19.18' @ TIDE 22 1933
PARCEL: N/A DRAWING SCALE: AS NOTED
PHASE: BID SET

E3
38 OF 59

THIS DRAWING IS THE PROPERTY OF THE PORT OF TACOMA AND SHALL NOT BE USED ON OTHER WORK, DISCLOSED, COPIED, IN WHOLE OR IN PART, WITHOUT WRITTEN PERMISSION

PORT OF TACOMA FILE: N:\Jobs\2018\18-032\Dwgs\18-032-E3

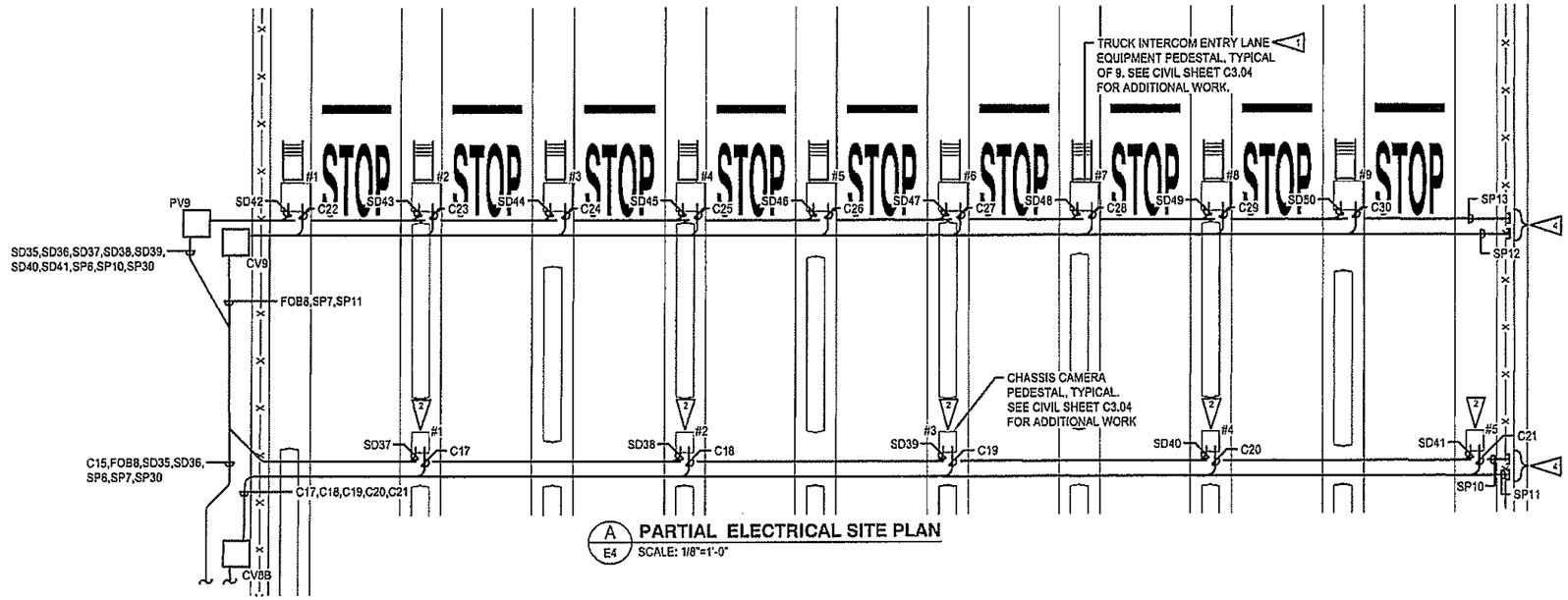

A / E4 PARTIAL ELECTRICAL SITE PLAN
SCALE: 1/8"=1'-0"

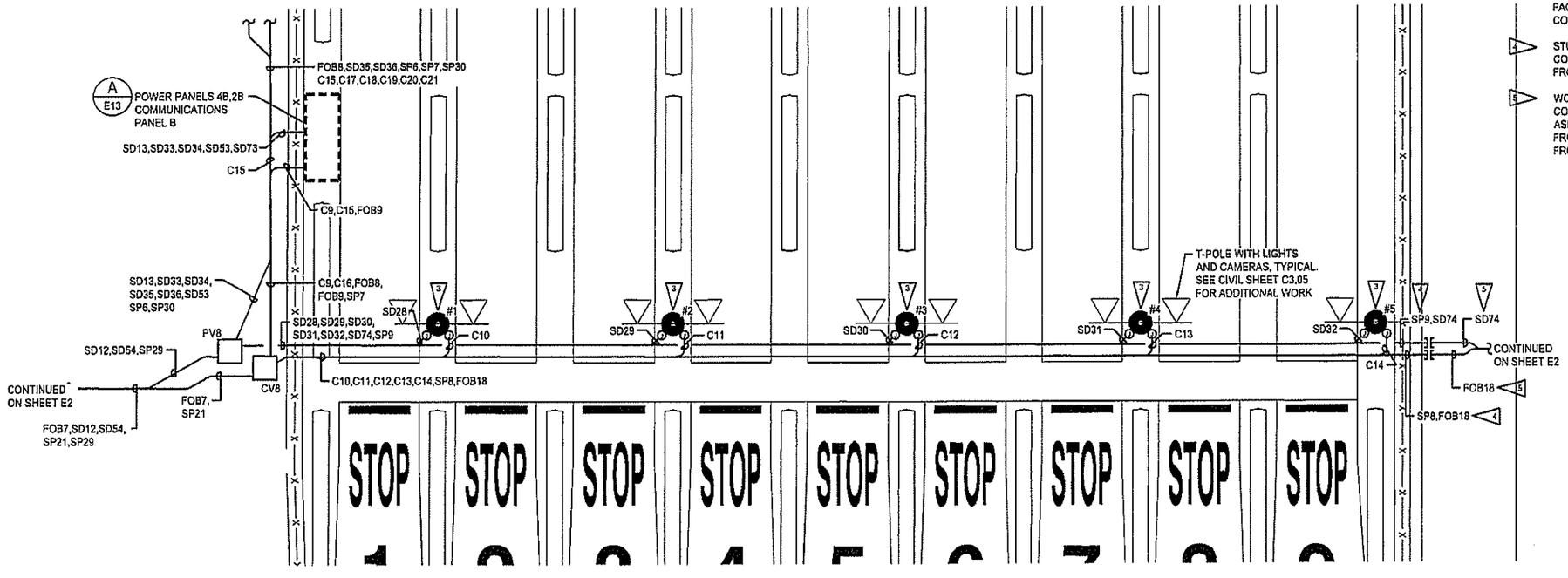

B / E4 PARTIAL ELECTRICAL SITE PLAN
SCALE: 1/8"=1'-0"

GENERAL NOTES:

1. SEE SHEET E1 FOR GENERAL NOTES.

ELECTRICAL NOTES:

1. COORDINATE POWER/WIRNG AND COMMUNICATIONS CONDUIT LOCATIONS IN INTERCOM PEDESTAL. PVC CONDUITS SHALL BE STUBBED 3" ABOVE CONCRETE. PROVIDE 16" MINIMUM POWER WIRING LOOP FOR CONNECTION TO RECEPTACLE BY OTHERS. SEE SHEET C3.04. PROVIDE #4 BARE COPPER GROUND WIRE TO REBAR, ANCHOR BOLTS, METAL STAIR AND TO 3/4" ROUND BY 10'-0" COPPER CLAD STEEL GROUND ROD.
2. COORDINATE POWER/WIRING AND COMMUNICATIONS CONDUIT LOCATIONS IN CHASSIS CAMERA PEDESTAL. SEE SHEET C3.04. PROVIDE #4 BARE COPPER GROUND WIRE TO REBAR, ANCHOR BOLTS AND TO 3/4" ROUND BY 10'-0" COPPER CLAD STEEL GROUND ROD. PROVIDE TWO(2) BEGA 22354K4BRZ19524120V OR EQUAL LIGHT FIXTURES MOUNTED IN PEDESTAL. REVIEW LIGHT CONTROL SHOP DRAWINGS AND PROVIDE WIRING REQUIRED.
3. COORDINATE POWER/WIRING, COMMUNICATIONS CONDUIT AND SURFACE PULL BOX LOCATIONS AT T-POLES. SEE SHEET C3.05. PROVIDE TWO(2) LIGHT FIXTURES AND AND STAINLESS STEEL MOUNTING HARDWARE ON POLE AS INDICATED. ILP WPSPYMK30WLEDUNIV4000KCORDX OR EQUAL. PROVIDE #4 BARE COPPER GROUND WIRE TO CONCRETE EMBEDDED REBAR, T-POLE ANCHOR BOLTS AND TO 3/4" ROUND BY 10'-0" COPPER CLAD STEEL GROUND ROD. ALL CONDUIT ON T-POLE SHALL BE PVC COATED FLEX OR PVCRS WERE EXPOSED PULL, JUNCTION AND LIGHT FIXTURE/CAMERA MOUNTING BOXES SHALL BE RS TYPE, GASKETED PAINTED TWO(2) COATS BLACK. USE STAINLESS STEEL SCREWS AND DO NOT PAINT. LIGHTS AND CAMERA CONNECTIONS SHALL BE FROM DOWN FACING HUBS. ITS/HUSKY WILL FURNISH CAMERAS CONTRACTOR TO INSTALL ON T-POLE.
4. STUB AND CAP CONDUITS BELOW GRADE AT LIMITS OF CONSTRUCTION BOUNDARY. DIMENSION LOCATIONS FROM CENTER OF PEDESTAL.
5. WORK FROM THIS POINT BY POT CONTRACTOR NIC. COORDINATE CONDUIT EXTENSION SAWCUTTING, ASPHALT REMOVAL, TRENCHING, BACKFILL, PATCHING FROM THIS LOCATION WITH POT CONTRACTOR. WIRE FROM PANEL 4B TO UNIT SUB BY POT CONTRACTOR.

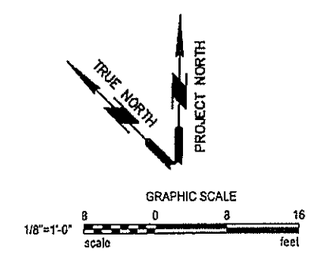

CROSS ENGINEERS, INC
923 MLK Jr. Way
Tacoma WA 98405
info@crossengineers.com
Phone: (253) 759-0118
Job Number: 18-032

moffatt & nichol
600 UNIVERSITY STREET
SUITE 619
SEATTLE, WA 98101
(206)622-0222

MARK:	REVISION:	BY:	APPR:	DATE:

CHECKED BY

PROJ. ENGR

DATE

DATE

PRINTED BY: ScottK Nov 20, 2019
SITE ADDRESS: 1281 PIER G WAY
LONG BEACH, CA 90802

LOT F REDEVELOPMENT
HUSKY PROCESSING LANES
PARTIAL ELECTRICAL SITE PLAN

TOWNSHIP: 21N | RANGE: 3E | SECTION: 34
DAT-HRZ: WA83/2011 | VERT: MLLW 19.18' @ TIDE 22 1933
PARCEL: N/A | DRAWING SCALE: AS NOTED
PHASE: 90% DESIGN

E4
39 OF 59

THIS DRAWING IS THE PROPERTY OF THE PORT OF TACOMA AND SHALL NOT BE USED ON OTHER WORK, DISCLOSED, COPIED, IN WHOLE OR IN PART, WITHOUT WRITTEN PERMISSION

BINDING EDGE
PORT OF TACOMA FILE: N:\Jobs\2018\18-032\Dwgs\18-032-E4

BINDING EDGE

GENERAL NOTES:

1. SEE SHEET E1 FOR GENERAL NOTES.

ELECTRICAL NOTES:

1. PROVIDE (2)2" PVRS CONDUIT ONLY UP EXISTING CONCRETE POLE BASE AND CAP.
2. COMMUNICATIONS HUT (NIC). CONTRACTOR SHALL COORDINATE CONDUIT STUBS OUT OF HUT AT FENCE LINE WITH POTM.
3. TROUBLE RESOLUTION BOOTH (NIC). PROVIDED BY HUSKY COMMUNICATIONS SYSTEMS PROVIDER. CONTRACTOR SHALL COORDINATE POWER AND COMMUNICATIONS CONDUITS INTO TROUBLE RESOLUTION BOOTH WITH HUSKY COMMUNICATIONS SYSTEMS PROVIDER.

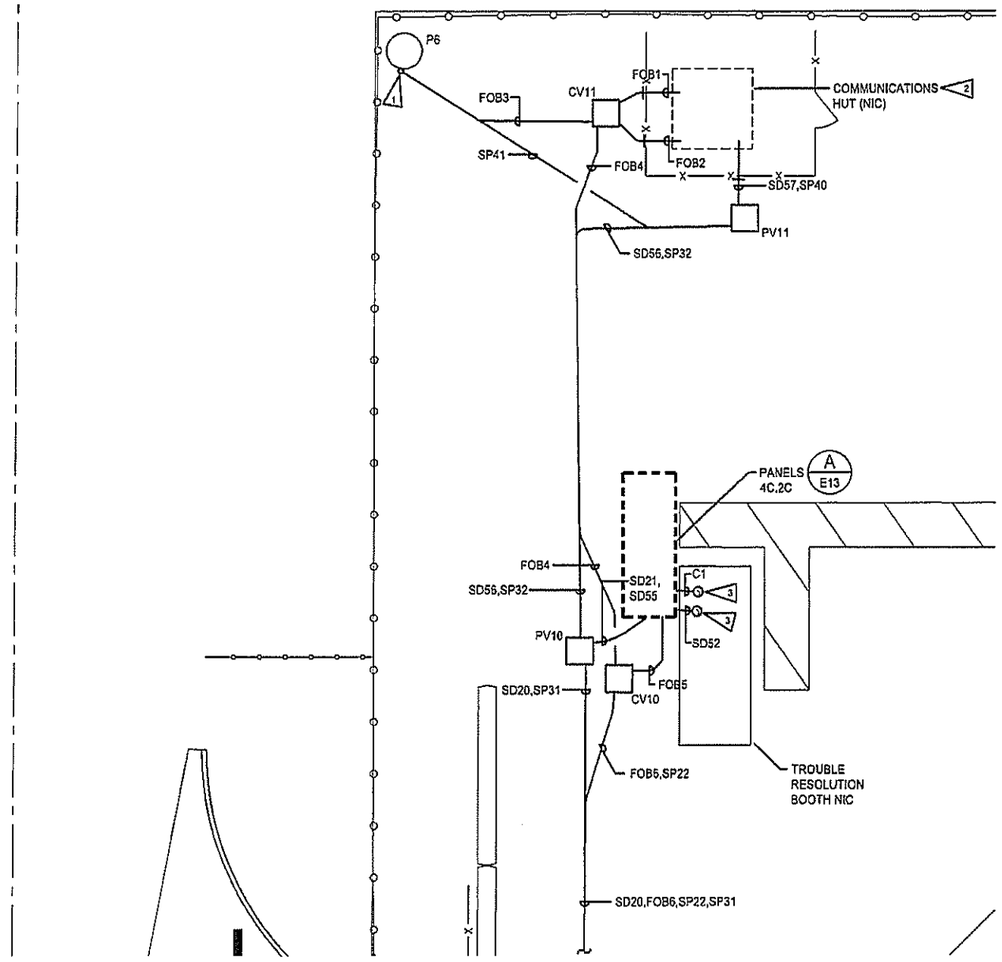

A/E5 PARTIAL ELECTRICAL SITE PLAN
SCALE: 1/8"=1'-0"

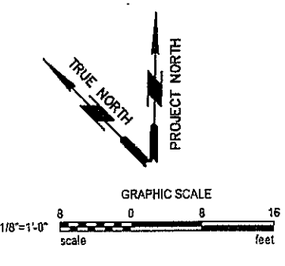

CROSS ENGINEERS, INC
923 MLK Jr. Way
Tacoma, WA 98405
info@crossengineers.com
Phone: (253) 759-0115
Job Number: 18-032

MARK:	REVISION:	BY:	APPR:	DATE:

moffatt & nichol
600 UNIVERSITY STREET
SUITE#610
SEATTLE, WA 98101
(206) 622-0222

husky ITS

CHECKED BY

PROJ. ENGR

PRINTED BY: ScottK Nov 20, 2019
SITE ADDRESS: 1281 PIER G WAY
LONG BEACH, CA 90802

LOT F REDEVELOPMENT
HUSKY PROCESSING LANES
PARTIAL ELECTRICAL SITE PLAN

TOWNSHIP: 21N RANGE: 3E SECTION: 34
DAT-HRZ: WA83/2011 VERT: MLLW 19.18' @ TIDE 22 1933
PARCEL: N/A DRAWING SCALE: AS NOTED
PHASE: 90% DESIGN

E5
40 OF 59

THIS DRAWING IS THE PROPERTY OF THE PORT OF TACOMA AND SHALL NOT BE USED ON OTHER WORK, DISCLOSED, COPIED, IN WHOLE OR IN PART, WITHOUT WRITTEN PERMISSION

PORT OF TACOMA FILE: N:\Jobs\2018\18-032\Dwgs\18-032-E5

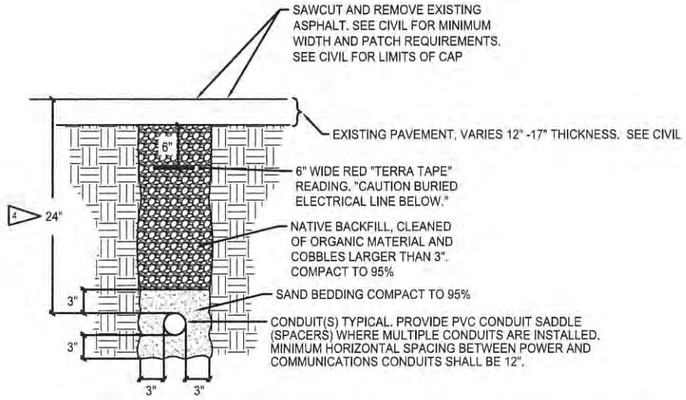

ELECTRICAL/COMMUNICATIONS TRENCH - TYPICAL ENTIRE SITE

NOT TO SCALE

GENERAL NOTES:

1. SEE SHEET E1 FOR GENERAL NOTES.

ELECTRICAL NOTES:

1. NEW SERVICE ENTRANCE RATED AUTOMATIC TRANSFER SWITCH PRE-ORDERED BY ITS/HUSKY INSTALLED BY CONTRACTOR. SEE POWER RISER SHEET E7.
2. PROVIDE NEW UNDERGROUND CONDUITS. SEE POWER RISER SHEET E7.
3. STUB AND CAP CONDUIT 6" ABOVE ASPHALT. ELBOW AND STUB SHALL BE PVCRS.
4. IN CAP AREAS FROM TOP OF ASPHALT. SEE CIVIL FOR LIMITS OF CAP.
5. ITS/HUSKY HAS PRE-ORDERED SERVICE ENTRANCE RATED ATS AND OPTIONAL STANDBY NEC 702 DIESEL GENERATOR. CONTRACTOR SHALL TAKE DELIVERY ON SITE, OFF LOAD, INSTALL AND TEST. CONTRACTOR SHALL PROVIDE ALL CONSUMABLES (ANTIFREEZE, OIL, LUBRICANTS, FILTERS) FOR ON SITE TESTING. CHANGE ALL FILTERS TO NEW AFTER ACCEPTANCE TEST. CONTRACTOR SHALL PROVIDE REINFORCED CONCRETE PAD AND MOUNT GENERATOR.

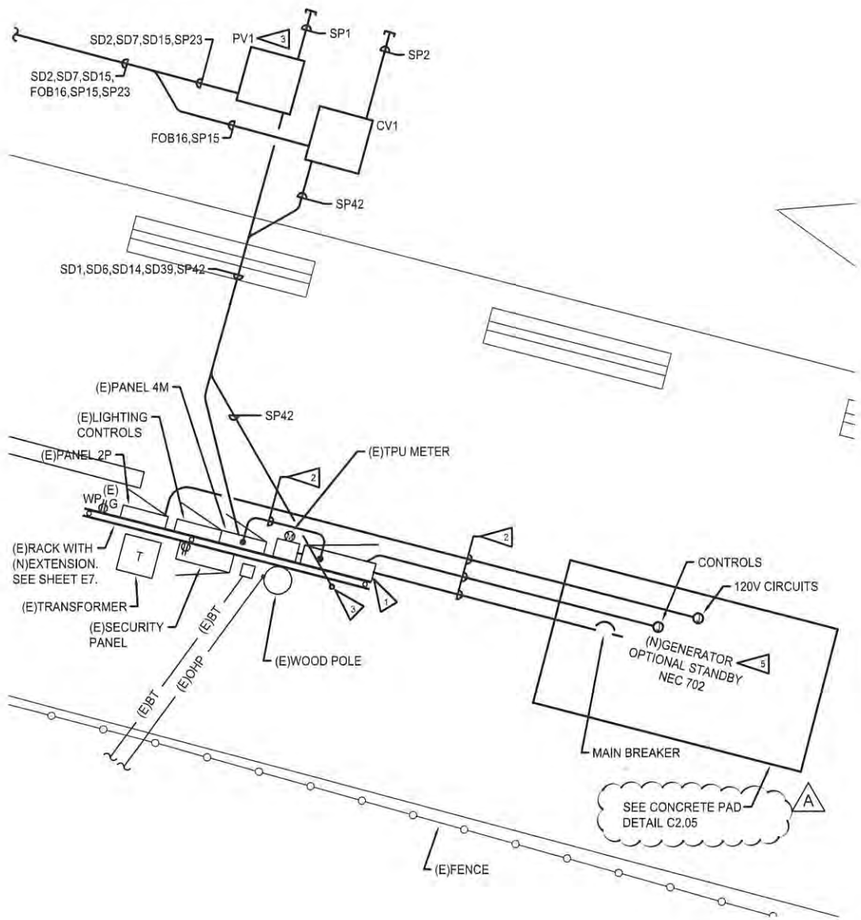

A / E6 **PARTIAL ELECTRICAL SITE PLAN**

SCALE: 1/4"=1'-0"

GRAPHIC SCALE 1/8"=1'-0" — 8 0 8 16 — scale feet

GRAPHIC SCALE 1/4"=1'-0" — 4 0 4 8 — scale feet

CROSS ENGINEERS, INC
923 MLK Jr. Way
Tacoma, WA 98405
info@crossengineers.com
Phone: (253) 759-0118
Job Number: 18-032

its husky
moffatt & nichol
600 UNIVERSITY STREET SUITE# 610 SEATTLE, WA 98101 (206) 622-0222

MARK:	REVISION:	BY:	APPR:	DATE:
A	ADDENDUM #A	SJK	GLW	12/11/19

STEVEN L. HUBBS REGISTERED PROFESSIONAL ENGINEER 12/11/19

		DATE
CHECKED BY	SLH	12-02-19
PROJ. ENGR	GLW	12-02-19

PRINTED BY: ScottK Dec 11, 2019

SITE ADDRESS: 1281 PIER G WAY LONG BEACH, CA 90802

LOT F REDEVELOPMENT
HUSKY PROCESSING LANES
PARTIAL ELECTRICAL SITE PLAN

TOWNSHIP: 21N | RANGE: 3E | SECTION: 34
DAT-HRZ: WA83/2011 | DAT-VRT: MLLW 19.18' @ TIDE 22 1933
PARCEL: N/A | DRAWING SCALE: AS NOTED

PHASE: BID SET

E6
41 OF 59

THIS DRAWING IS THE PROPERTY OF THE PORT OF TACOMA AND SHALL NOT BE USED ON OTHER WORK, DISCLOSED, COPIED, IN WHOLE OR IN PART, WITHOUT WRITTEN PERMISSION

BINDING EDGE
PORT OF TACOMA FILE: N:\Jobs\2018\18-032\Dwgs\18-032-E6

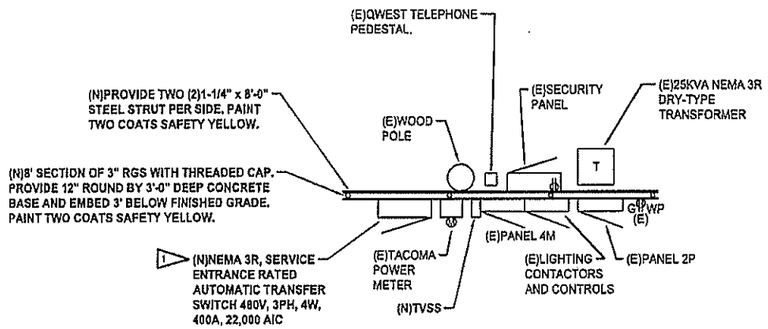

ELECTRICAL SERVICE LAYOUT

SCALE: 1/4"=1'-0"

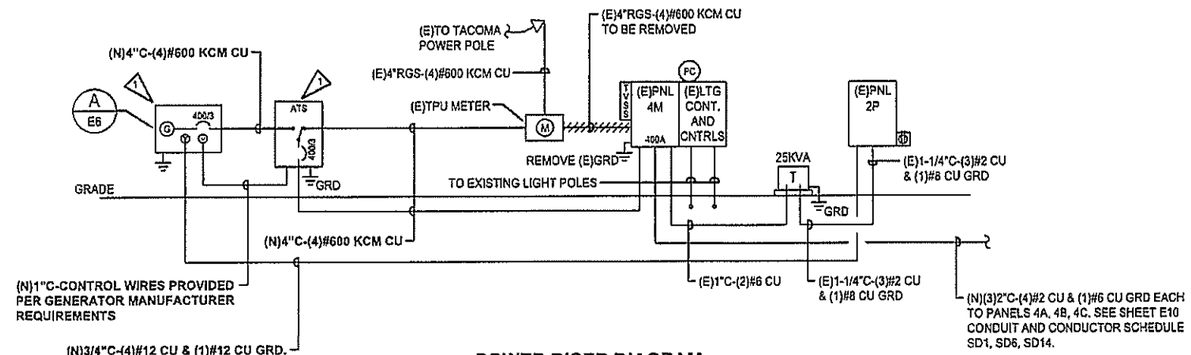

POWER RISER DIAGRAM

NOT TO SCALE

(E)NEMA 3R - EXISTING

PANEL SCHEDULE

SURFACE MOUNTING
14,000 AIC

NO. 4M — LOCATION: LOT F — SERVING: LIGHTING, PANELS — 480/277 VOLTS 3PHASE 4WIRE — 400 AMPS WITH 400 MAIN BREAKER

CKT NO.	LOAD DESCRIPTION	KVA	TRIP AMPS		TRIP AMPS	KVA	LOAD DESCRIPTION	CKT NO.	
1	CIRCUIT #1 LIGHTS	30.00	100		100	14.60	PANEL 4A	2	2
3								4	
5			3		3			6	
7	CIRCUIT #2 LIGHTS	30.00	100		100	15.00	PANEL 4B	8	2
9								10	
11			3		3			12	
13	SPACE				100	6.40	PANEL 4C	14	3
15								16	
17					3			18	
19					20		SPARE	20	
21	SPACE				20		SPARE	22	
23	PANEL 2P V/A 25KVA XFMR	3.20	60		20		SPARE	24	
25			2		30		TVSS	26	3
27	SPARE		20					28	
29	LIGHTING CONTROLS	.10	20		3			30	

REMARKS: .

CONNECTED LOAD: 99.2 KVA 120 AMPS
DEMAND LOAD: 114.2 KVA 138 AMPS

PROVIDE HANDLE TIES FOR ALL MULTI-CIRCUIT HOMERUNS SHARING A NEUTRAL PER THE NATIONAL ELECTRIC CODE ARTICLE 210.4 MULTIWIRE BRANCH CIRCUITS. PART (B) DISCONNECTING MEANS. DRAWINGS ARE DIAGRAMMATIC. WHERE THE CONTRACTOR MODIFIES THE CIRCUITING, THE CONTRACTOR SHALL PROVIDE AN INDIVIDUAL NEUTRAL PER CIRCUIT, MULTI-POLE CIRCUIT BREAKERS, OR CIRCUIT BREAKER HANDLE TIE TO MEET THE NEC ARTICLE. ALL COSTS ASSOCIATED WITH MODIFICATIONS SHALL BE INCLUDED IN THE CONTRACTOR'S BID.

PANEL 4M LOAD CALCULATIONS

SERVICE	KVA LOAD		FACTOR	NEC REF.		DEMAND LOAD
LIGHTING	60.00	X	1.25	220.19(A)(1)	=	75.00
RECEPTS TO 10KW	-	X	1.00	220.44	=	-
RECEPTS OVER 10KW	-	X	0.50	220.44	=	-
MOTORS (LARGEST)	-	X	1.25	430.24	=	-
MOTORS	-	X	1.00	430.24	=	-
KITCHEN EQUIP.	-	X	1.00	220.56	=	-
WELDERS	-	X	1.00	630.11(B)	=	-
AIR CONDITIONING	-	X	1.00	220.50	=	-
ELECTRIC HEAT	-	X	1.00	220.51	=	-
MISCELLANEOUS	39.20	X	1.00		=	39.20
TOTAL CONNECTED	99.2 KVA (120 AMPS)			TOTAL DEMAND		114.2 KVA (138 AMPS)

(E)NEMA 3R - EXISTING

PANEL SCHEDULE

SURFACE MOUNTING
10,000 AIC

NO. 2P — LOCATION: LOT F — SERVING: RECEPTACLES — 120/240 VOLTS 1PH 3WIRE — 100 AMPS WITH 100 MAIN BREAKER

CKT NO.	LOAD DESCRIPTION	KVA	TRIP AMPS		TRIP AMPS	KVA	LOAD DESCRIPTION	CKT NO.	
1	RECEPTACLE	.18	20		20	1.20	BLOCK HEATER	2	2
3	HEATERS	1.00				.10	BATTERY CHARGER	4	
5	SECURITY	.50				.20	LIGHTS, RECEPTACLE	6	
7	SPARE				20	.36	COMM. PANEL D	8	
9					20		SPARE	10	
11								12	
13								14	
15								16	
17								18	
19	SPARE		20		20		SPARE	20	

REMARKS: .

CONNECTED LOAD: 3.2 KVA 13 AMPS
DEMAND LOAD: 3.2 KVA 13 AMPS

PROVIDE HANDLE TIES FOR ALL MULTI-CIRCUIT HOMERUNS SHARING A NEUTRAL PER THE NATIONAL ELECTRIC CODE ARTICLE 210.4 MULTIWIRE BRANCH CIRCUITS. PART (B) DISCONNECTING MEANS. DRAWINGS ARE DIAGRAMMATIC. WHERE THE CONTRACTOR MODIFIES THE CIRCUITING, THE CONTRACTOR SHALL PROVIDE AN INDIVIDUAL NEUTRAL PER CIRCUIT, MULTI-POLE CIRCUIT BREAKERS, OR CIRCUIT BREAKER HANDLE TIE TO MEET THE NEC ARTICLE. ALL COSTS ASSOCIATED WITH MODIFICATIONS SHALL BE INCLUDED IN THE CONTRACTOR'S BID.

PANEL 2P LOAD CALCULATIONS

SERVICE	KVA LOAD		FACTOR	NEC REF.		DEMAND LOAD
LIGHTING	-	X	1.25	220.19(A)(1)	=	-
RECEPTS TO 10KW	-	X	1.00	220.44	=	-
RECEPTS OVER 10KW	-	X	0.50	220.44	=	-
MOTORS (LARGEST)	-	X	1.25	430.24	=	-
MOTORS	-	X	1.00	430.24	=	-
KITCHEN EQUIP.	-	X	1.00	220.56	=	-
WELDERS	-	X	1.00	630.11(B)	=	-
AIR CONDITIONING	-	X	1.00	220.50	=	-
ELECTRIC HEAT	-	X	1.00	220.51	=	-
MISCELLANEOUS	3.20	X	1.00		=	3.20
TOTAL CONNECTED	3.2 KVA (13 AMPS)			TOTAL DEMAND		3.2 KVA (13 AMPS)

ELECTRICAL NOTES:

1. ITS/HUSKY HAS PRE-ORDERED NEMA 3R, OPTIMAL STANDBY 702 DIESEL GENERATOR, 300KW, 375KVA, 480V, 3PH, 4W, WITH INTEGRAL 48 HOUR, DOUBLE WALL, BELLY TANK, TO BE MOUNTED ON A REBAR REINFORCED, 12"D CONCRETE PAD EXTENDING 12" BEYOND GENERATOR FOOTPRINT AND NEMA 3R, STAINLESS STEEL, SERVICE ENTRANCE RATED, 400A, 480V, 3PH, 4W AUTOMATIC TRANSFER SWITCH.
2. UTILIZE EXISTING SPARE CIRCUIT BREAKER.
3. PROVIDE CIRCUIT BREAKER NEW.

CROSS ENGINEERS, INC
923 MLK Jr. Way
Tacoma, WA 98405
Info@crossengineers.com
Phone: (253) 759-0118
Job Number: 18-032

600 UNIVERSITY STREET
SUITE#610
SEATTLE, WA 98101
(206) 623-4222
moffatt & nichol

MARK:	REVISION:	BY:	APPR:	DATE:

CHECKED BY — DATE
PROJ. ENGR — DATE
PRINTED BY: Scott K Nov 20, 2019

LOT F REDEVELOPMENT
HUSKY PROCESSING LANES
POWER RISER DIAGRAM/ ELECTRICAL DETAILS AND SCHEDULES

TOWNSHIP: 21N | RANGE: 3E | SECTION: 34
SITE ADDRESS: 1281 PIER G WAY LONG BEACH, CA 90802
DAT-HRZ: WA83/2011 | VERT: MLLW 19.18' @ TIDE 22 1933
PHASE: 90% DESIGN | PARCEL: N/A | DRAWING SCALE: AS NOTED

E7
42 OF 59

THIS DRAWING IS THE PROPERTY OF THE PORT OF TACOMA AND SHALL NOT BE USED ON OTHER WORK, DISCLOSED, COPIED, IN WHOLE OR IN PART, WITHOUT WRITTEN PERMISSION

BINDING EDGE
PORT OF TACOMA FILE: N:\Jobs\2018\18-032\Dwgs\18-032-E7

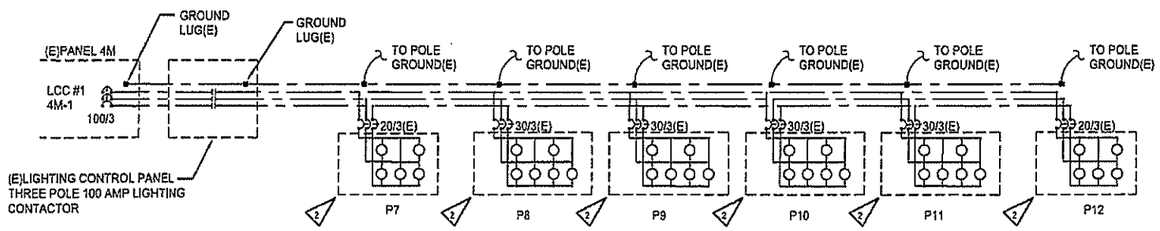

EXISTING LIGHTING CONTROL CIRCUIT #1

NOT TO SCALE

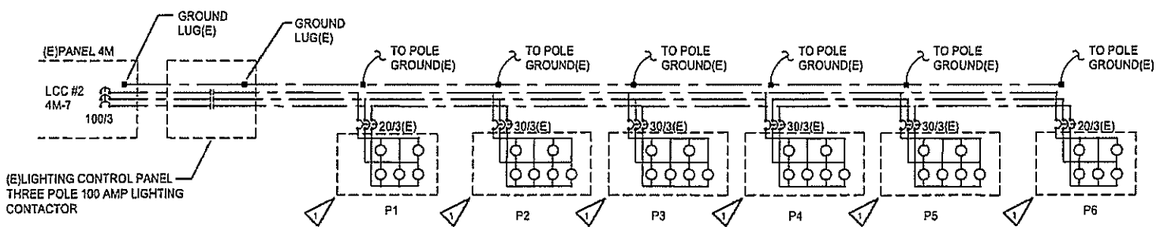

EXISTING LIGHTING CONTROL CIRCUIT #2

NOT TO SCALE

ELECTRICAL NOTES:

1. PROVIDE NEW #10 CU IN EXISTING CONDUIT FROM EXISTING CIRCUIT BREAKER ON EACH EXISTING POLE UP TO A NEW 8"x8"x6", NEMA 4, NON-METALLIC BOX WITH COVER LOCATED BETWEEN CROSS ARMS. REMOVE EXISTING LIGHTING BRACKET CROSS ARMS. PROVIDE NEW MOUNTING BRACKET CROSS ARMS PAINTED TWO(2) COATS GREY. ALL METAL PARTS OR EXPOSED GALVANIZED MATERIAL IS NOT ALLOWED. MOUNTING HARDWARE SHALL BE STAINLESS STEEL FOR NEW LIGHT FIXTURES, GARMIRE OR EQUAL. LIGHT FIXTURE MANUFACTURER SHALL PROVIDE AIMING ANGLES, BEAM SPREAD AND MOUNTING POSITIONS FOR FIELD AIMING INSTALLATION BY CONTRACTOR. AREA LIGHTING CALCULATIONS SHALL BE BASED ON ENTIRE LENGTH OF SITE AND THE SITE WIDTH. MINIMUM 3FC WITH MAX/MIN OF LESS THAN 6. NO LIGHT SPILL PAST PROPERTY LINE. AS A SHOP DRAWING SUBMITTAL PROVIDE COMPUTER GENERATED PHOTOMETRICS ON SCALED SITE PLAN WITH LIGHT METER READINGS AT 30'x30' SPACINGS. INCLUDE MOUNTING HEIGHT, FIXTURE TYPE, LUMENS PER LIGHT FIXTURE, WATTAGE PER LIGHT FIXTURE AND AIMING COORDINATES FOR EACH. PROVIDE NEW LIGHT FIXTURES 800W, 480V, LED LIGHTS SPECGRADE AFL800WBEAM480V8300LMWTTLGSCNSP10, OR EQUAL BY HOLOPHANE OR HUBBEL.

2. NIC. PROVIDE NEW #10 CU IN EXISTING CONDUIT FROM EXISTING CIRCUIT BREAKER ON EACH EXISTING POLE UP TO A NEW 8"x8"x6", NEMA 4, NON-METALLIC BOX WITH COVER LOCATED BETWEEN CROSS ARMS. REMOVE EXISTING LIGHTING BRACKET CROSS ARMS. PROVIDE NEW MOUNTING BRACKET CROSS ARMS PAINTED TWO(2) COATS GREY. ALL METAL PARTS OR EXPOSED GALVANIZED MATERIAL IS NOT ALLOWED. MOUNTING HARDWARE SHALL BE STAINLESS STEEL FOR NEW LIGHT FIXTURES, GARMIRE OR EQUAL. LIGHT FIXTURE MANUFACTURER SHALL PROVIDE AIMING ANGLES, BEAM SPREAD AND MOUNTING POSITIONS FOR FIELD AIMING INSTALLATION BY CONTRACTOR. AREA LIGHTING CALCULATIONS SHALL BE BASED ON ENTIRE LENGTH OF SITE AND THE SITE WIDTH. MINIMUM 3FC WITH MAX/MIN OF LESS THAN 6. NO LIGHT SPILL PAST PROPERTY LINE. AS A SHOP DRAWING SUBMITTAL PROVIDE COMPUTER GENERATED PHOTOMETRICS ON SCALED SITE PLAN WITH LIGHT METER READINGS AT 30'x30' SPACINGS. INCLUDE MOUNTING HEIGHT, FIXTURE TYPE, LUMENS PER LIGHT FIXTURE, WATTAGE PER LIGHT FIXTURE AND AIMING COORDINATES FOR EACH. PROVIDE NEW LIGHT FIXTURES 800W, 480V, LED LIGHTS SPECGRADE AFL800WBEAM480V8300LMWTTLGSCNSP10, OR EQUAL BY HOLOPHANE OR HUBBEL.

CROSS ENGINEERS, INC
823 MLK Jr. Way
Tacoma, WA 98405
info@crossengineers.com
Phone: (253) 759-0118
Job Number: 18-032

moffatt & nichol
600 UNIVERSITY STREET SUITE#610 SEATTLE, WA 98101 (206)622-0822

MARK:	REVISION:	BY:	APPR:	DATE:

LOT F REDEVELOPMENT
HUSKY PROCESSING LANES
ELECTRICAL DETAILS

CHECKED BY — DATE

PROJ. ENGR — DATE

PRINTED BY: ScottK Nov 20, 2019

SITE ADDRESS: 1281 PIER G WAY
LONG BEACH, CA 90802

TOWNSHIP: 21N | RANGE: 3E | SECTION: 34

DAT-HRZ: WGS/2011 | VERT: MLLW 19.18' @ TIDE 22 19.33

PARCEL: N/A | DRAWING SCALE: AS NOTED

PHASE: 90% DESIGN

E8
43 OF 59

THIS DRAWING IS THE PROPERTY OF THE PORT OF TACOMA AND SHALL NOT BE USED ON OTHER WORK, DISCLOSED, COPIED, IN WHOLE OR IN PART, WITHOUT WRITTEN PERMISSION

BINDING EDGE
PORT OF TACOMA FILE: N:\Jobs\2018\18-032\Dwgs\18-032-E8

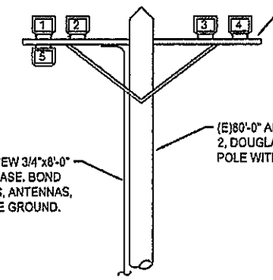

CONTRACTOR SHALL REMOVE EXISTING LIGHT FIXTURES AND CROSS ARMS (NOT SHOW) AND PROVIDE NEW GREY PAINTED (2 COATS OVER GALVANIZED STEEL CROSS ARMS). GARMIRE OR EQUAL WITH STAINLESS STEEL MOUNTING HARDWARE. PROVIDE NEW LED LIGHT FIXTURES QUANTITY AS INDICATED. PROVIDE NEW WIRING IN EXISTING CONDUIT FROM CIRCUIT BREAKER ON POLE BASE TO LED LIGHTS. PROVIDE STAINLESS STEEL BIRD SPIKES ON LIGHT FIXTURES, CROSS ARMS AND POLE TOPS.

(E)80'-0" ABOVE FINISHED GRADE CLASS 2, DOUGLAS FIR, PENTA TREATED WOOD POLE WITH TAPERED TOP.

PROVIDE NEW #6 BARE COPPER GROUND TO NEW 3/4"x8'-0" COPPER CLAD STEEL GROUND ROD AT POLE BASE. BOND ALL NEW AND EXISTING EQUIPMENT CONDUITS, ANTENNAS, CAMERAS, BOXES, ETC. ON POLE TO NEW POLE GROUND.

LIGHTING POLE ELEVATION TYPICAL

NO SCALE

P1, P6, P7, P12

NIC. SEE SHEET E6, NOTE 3

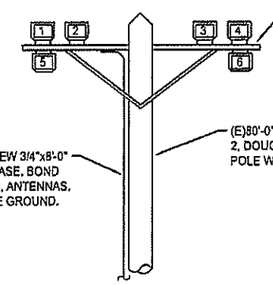

CONTRACTOR SHALL REMOVE EXISTING LIGHT FIXTURES AND CROSS ARM. PROVIDE NEW GALVANIZED STEEL CROSS ARMS (GREY PAINTED 2 COATS). GARMIRE OR EQUAL WITH STAINLESS STEEL MOUNTING HARDWARE. PROVIDE NEW LED LIGHT FIXTURES QUANTITY AS INDICATED. PROVIDE NEW WIRING IN EXISTING CONDUIT FROM CIRCUIT BREAKER AT POLE BASE TO NEW LED LIGHTS. PROVIDE STAINLESS STEEL BIRD SPIKE STRIPS ON LIGHT FIXTURES, CROSS ARMS AND POLE TOPS.

(E)80'-0" ABOVE FINISHED GRADE CLASS 2, DOUGLAS FIR, PENTA TREATED WOOD POLE WITH TAPERED TOP.

PROVIDE NEW #6 BARE COPPER GROUND TO NEW 3/4"x8'-0" COPPER CLAD STEEL GROUND ROD AT POLE BASE. BOND ALL NEW AND EXISTING EQUIPMENT CONDUITS, ANTENNAS, CAMERAS, BOXES, ETC. ON POLE TO NEW POLE GROUND.

LIGHTING POLE ELEVATION TYPICAL

NO SCALE

P2, P3, P4, P5, P8, P9, P10, P11

NIC. SEE SHEET E8, NOTE 3

CROSS ENGINEERS, INC
923 MLK Jr. Way
Tacoma, WA 98405
info@crossengineers.com
Phone: (253) 759-0118
Job Number: 18-032

moffatt & nichol
600 UNIVERSITY STREET
SUITE# 610
SEATTLE, WA 98101
(206)622-4222

MARK:	REVISION:	BY:	APPR:	DATE:

CHECKED BY DATE

PROJ. ENGR DATE

PRINTED BY: ScottK Nov 20, 2019

SITE ADDRESS: 1281 PIER G WAY LONG BEACH, CA 90802

LOT F REDEVELOPMENT
HUSKY PROCESSING LANES
ELECTRICAL DETAILS

TOWNSHIP: 21N | RANGE: 3E | SECTION: 34

DAT-HRZ: WA83/2011 | VERT: MLLW 19.18' @ TIDE 22 1933

PARCEL: N/A | DRAWING SCALE: AS NOTED

PHASE: 90% DESIGN

E9
44 OF 59

THIS DRAWING IS THE PROPERTY OF THE PORT OF TACOMA AND SHALL NOT BE USED ON OTHER WORK, DISCLOSED, COPIED, IN WHOLE OR IN PART, WITHOUT WRITTEN PERMISSION

BINDING EDGE
PORT OF TACOMA FILE: N:\Jobs\2018\18-032\Dwgs\18-032-E9

CONDUIT AND CONDUCTOR SCHEDULE

CIRCUIT ID	CONDUIT NO.	CONDUIT SIZE	CONDUIT TYPE	CONDUCTORS PER CONDUIT NO.	CONDUCTORS PER CONDUIT SIZE	CONDUCTORS PER CONDUIT TYPE	FROM	TO	REMARKS
SD1	1	2	1 1	4/1	2/6	600V	(E)PANEL 4M	PV1	
SD2	1	2	2	4/1	2/6	600V	PV1	PV2	
SD3	1	2	2	4/1	2/6	600V	PV2	PV3	
SD4	1	2	2	4/1	2/6	600V	PV3	PV4	
SD5	1	2	2 4	4/1	2/6	600V	PV4	PANEL 4A	
SD6	1	2	1 4	4/1	2/6	600V	(E)PANEL 4M	PV1	
SD7	1	2	2	4/1	2/6	600V	PV1	PV2	
SD8	1	2	2	4/1	2/6	600V	PV2	PV3	
SD9	1	2	2	4/1	2/6	600V	PV3	PV5	
SD10	1	2	2	4/1	2/6	600V	PV5	PV6	
SD11	1	2	2	4/1	2/6	600V	PV6	PV7	
SD12	1	2	2	4/1	2/6	600V	PV7	PV8	
SD13	1	2	1 4	4/1	2/6	600V	PV8	PANEL 4B	
SD14	1	2	1 4	4/1	2/6	600V	(E)PANEL 4M	PV1	
SD15	1	2	2	4/1	2/6	600V	PV1	PV2	
SD16	1	2	2	4/1	2/6	600V	PV2	PV3	
SD17	1	2	2	4/1	2/6	600V	PV3	PV5	
SD18	1	2	2	4/1	2/6	600V	PV5	PV6	
SD19	1	2	2	4/1	2/6	600V	PV6	PV7	
SD20	1	2	2	4/1	2/6	600V	PV7	PV10	
SD21	1	2	1 4	4/1	2/6	600V	PV10	PANEL 4D	
SD22	1	.75	2	2/1	12/12	600V	PANEL 2A	ENTRY PEDESTAL #1	10
SD23	1	.75	2	2/1	12/12	600V	PANEL 2A	ENTRY PEDESTAL #2	10
SD24	1	.75	2	2/1	12/12	600V	PANEL 2A	ENTRY PEDESTAL #3	10
SD25	1	.75	2	2/1	12/12	600V	PANEL 2A	GATE ARM #1	10
SD26	1	.75	2	2/1	12/12	600V	PANEL 2A	GATE ARM #2	10
SD27	1	1	2	2/1	12/12	600V	PANEL 2A	GATE ARM #3	10
SD28	1	1	2	2/1	10/12	600V	PV8	T-POLE #1	
SD29	1	1	2	2/1	10/12	600V	PV8	T-POLE #2	
SD30	1	1	2	2/1	10/12	600V	PV8	T-POLE #3	
SD31	1	1	2	2/1	10/12	600V	PV8	T-POLE #4	
SD32	1	1	2	2/1	10/10	600V	PV8	T-POLE #5	
SD33	1	2	1 4	6/1	10/10	600V	PANEL 2B	PV8	
SD34	1	2	1 4	4/1	10/10	600V	PANEL 2B	PV8	
SD35	1	2	2	6/1	10/10	600V	PV8	PV9	10
SD36	1	2	2	4/1	10/10	600V	PV8	PV9	10
SD37	1	.75	2	2/1	10/10	600V	PV9	CHASSIS CAMERA PEDESTAL #1	
SD38	1	.75	2	2/1	10/10	600V	PV9	CHASSIS CAMERA PEDESTAL #2	
SD39	1	.75	2	2/1	10/10	600V	PV9	CHASSIS CAMERA PEDESTAL #3	
SD40	1	.75	2	2/1	10/10	600V	PV9	CHASSIS CAMERA PEDESTAL #4	
SD41	1	.75	2	2/1	10/10	600V	PV9	CHASSIS CAMERA PEDESTAL #5	
SD42	1	.75	2	2/1	10/10	600V	PV9	TRUCK INTERCOM PEDESTAL #1	
SD43	1	.75	2	2/1	10/10	600V	PV9	TRUCK INTERCOM PEDESTAL #2	
SD44	1	.75	2	2/1	10/10	600V	PV9	TRUCK INTERCOM PEDESTAL #3	
SD45	1	.75	2	2/1	10/10	600V	PV9	TRUCK INTERCOM PEDESTAL #4	
SD46	1	.75	2	2/1	10/10	600V	PV9	TRUCK INTERCOM PEDESTAL #5	
SD47	1	.75	2	2/1	10/10	600V	PV9	TRUCK INTERCOM PEDESTAL #6	
SD48	1	.75	2	2/1	10/10	600V	PV9	TRUCK INTERCOM PEDESTAL #7	
SD49	1	.75	2	2/1	10/10	600V	PV9	TRUCK INTERCOM PEDESTAL #8	
SD50	1	.75	2	2/1	10/10	600V	PV9	TRUCK INTERCOM PEDESTAL #9	
SD51									NOT USED
SD52	1	1	1 4	4/1	12/12	600V	PANEL 2C	TROUBLE BOOTH CIRCUITS	
SD53	1	1	1 4	2/1	8/10	600V	PANEL 4B	PV8	
SD54	1	1	1 4	2/1	8/10	600V	PV8	PV7	
SD55	1	1	1 4	4/1	6/10	600V	PANEL 2C	PV10	
SD56	1	1	2	4/1	6/10	600V	PV10	PV11	
SD57	1	1	2	4/1	6/10	600V	PV11	HUT	WIRE TO LUGS
SD58	1	1	1 4	2/1	8/10	600V	PANEL 4A	PV4	
SD59	1	1	2	2/1	8/10	600V	PV4	PV4A	
SD60	1	1	1 4	2/1	8/10	600V	PV4A	UNIT SUB POLE #12	NIC
SD61	1	1	1 4	2/1	8/10	600V	PV7	UNIT SUB POLE #5	NIC
SD62	1	.75	1 4	2/1	12/12	600V	PANEL 2A	OCR #1	10
SD63	1	.75	1 4	2/1	12/12	600V	PANEL 2A	OCR #2	10
SD64	1	.75	1 4	2/1	12/12	600V	PANEL 2A	OCR #3	10
SD70	1	1	1 4	2/1	8/10	600V	PANEL 4A	PV4	
SD71	1	1	2	2/1	8/10	600V	PV4	PV3	
SD72	1	1	2	2/1	8/10	600V	PV3	UNIT SUB POLE #2	
SD73	1	1	1 4	2/1	8/10	600V	PANEL 4B	PV8	
SD74	1	1	2	2/1	8/10	600V	PV8	PV8A	
SD75	1	1	2	2/1	8/10	600V	PV8A	UNIT SUB POLE #9	

SCHEDULE ABBREVIATION LEGEND:

C	=	COMMUNICATIONS	SDV	=	SECONDARY POWER VAULT
CV	=	COMMUNICATIONS VAULT	SL	=	SITE LIGHTING
FOB	=	FIBER OPTIC	SP	=	SPARE CONDUIT
SD	=	SECONDARY 600V DISTRIBUTION	TPU	=	TACOMA PUBLIC UTILITIES
SC	=	SECURITY CAMERAS	WPC	=	WHERE-PORT COMMUNICATIONS

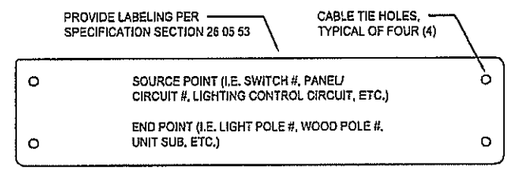

CONDUCTOR IDENTIFICATION LABEL (A / E10)
NOT TO SCALE

SCHEDULE NOTES:

1. EXISTING CONDUIT
2. PVC SCHEDULE 80
3. STUB AND CAP AT TOP OF CONCRETE BASE.
4. PVC COATED GRS CONDUIT
5. STUB AND CAP 12" ABOVE FINISHED GRADE.
6. PROVIDE MAXCELL EDGE DETECTABLE 3 CELL INNER DUCT. MAXCELL MXC2003 OR EQUAL.
7. COORDINATE AND INSTALL FIELD WIRING FOR SCALES SUPPLIED WITH SCALE EQUIPMENT.
8. NOT USED.
9. NOT IN CONTRACT (NIC)
10. REVIEW AND COORDINATE WITH TRUCK INTERCOM MANUFACTURER'S SHOP DRAWINGS. STUB PVC CONDUIT 3" ABOVE TOP OF CONCRETE, WITH 18" WIRE LOOP FOR CONNECTION TO RECEPTACLE BY INTERCOM CABINET SUPPLIER. SEE CIVIL.
11. STUB CONDUIT MINIMUM 6" ABOVE OCR PARTIAL FOUNDATION. LEAVE MINIMUM 24" LOOP OF POWER WIRE FOR EXTENSION BY OCR EQUIPMENT PROVIDER. SEE CIVIL.
12. REVIEW AND COORDINATE POWER CONNECTION WITH GATE ARM MANUFACTURER. COMMUNICATION'S WIRING BY GATE ARM MANUFACTURER. SEE CIVIL.
13. PROVIDE WATER TIGHT SPLICE(S) IN VAULT FOR GROUND WIRE. PROVIDE GROUND WIRE IN INDIVIDUAL CONDUITS TO EACH T-POLE, CHASSIS CAMERA PEDESTALS AND TRUCK INTERCOM PEDESTALS. SEE CIVIL.
14. PROVIDE OUTSIDE PLANT (OSP), 24 FIBER COUNT, LOOSE TUBE, SINGLE JACKET FIBER CABLE. POT CONTRACTOR NIC.
15. PROVIDE OUTSIDE PLANT (OSP), 6 FIBER COUNT, LOOSE TUBE, SINGLE JACKET FIBER CABLE. ITS/HUSKY CONTRACTOR.

CROSS ENGINEERS, INC
923 MLK Jr. Way
Tacoma WA 98405
info@crossengineers.com
Phone: (253) 759-0118
Job Number: 18-032

moffatt & nichol
600 UNIVERSITY STREET SUITE 610 SEATTLE, WA 98101 (206) 622-0222

MARK:	REVISION:	BY:	APPR:	DATE:

CHECKED BY DATE
PROJ. ENGR DATE

PRINTED BY: ScottK Nov 20, 2019
SITE ADDRESS: 1281 PIER G WAY LONG BEACH, CA 90802

LOT F REDEVELOPMENT
HUSKY PROCESSING LANES
CONDUIT AND CONDUCTOR SCHEDULE

TOWNSHIP: 21N | RANGE: 3E | SECTION: 34
DAT-HRZ: WAB3/2011-NSRT: MLLW 19.18' @ TIDE 22 1933
PARCEL: N/A | DRAWING SCALE: AS NOTED
PHASE: 90% DESIGN

E10
45 OF 59

THIS DRAWING IS THE PROPERTY OF THE PORT OF TACOMA AND SHALL NOT BE USED ON OTHER WORK, DISCLOSED, COPIED, IN WHOLE OR IN PART, WITHOUT WRITTEN PERMISSION

BINDING EDGE
PORT OF TACOMA FILE: N:\Jobs\2018\18-032\Dwg\18-032-E10

CONDUIT AND CONDUCTOR SCHEDULE

CIRCUIT ID	CONDUIT NO.	CONDUIT SIZE	CONDUIT TYPE	CONDUCTORS PER CONDUIT NO.	CONDUCTORS PER CONDUIT SIZE	CONDUCTORS PER CONDUIT TYPE	FROM	TO	REMARKS
SP1	2	2	(2)	-	-	-	PV1	STUB AND CAP 15'	
SP2	2	2	(2)	-	-	-	CV1	STUB AND CAP 15'	
SP3	1	2	(2)(4)	-	-	-	PV4	PANEL 4A	
SP4	2	2	(2)(4)	-	-	-	PV4	PANEL 2A	
SP5	2	1	(2)	-	-	-	CV4	STUB AND CAP AT LIMIT OF CONSTRUCTION BOUNDRY	
SP6	6	2	(2)	-	-	-	PV8	PV9	
SP7	6	2	(2)	-	-	-	CV8	CV9	
SP8	3	2	(2)	-	-	-	CV8	STUB AND CAP AT LIMIT OF CONSTRUCTION BOUNDRY	
SP9	3	2	(2)	-	-	-	PV8	STUB AND CAP AT LIMIT OF CONSTRUCTION BOUNDRY	
SP10	3	2	(2)	-	-	-	PV9	STUB AND CAP AT LIMIT OF CONSTRUCTION BOUNDRY	
SP11	3	2	(2)	-	-	-	CV9	STUB AND CAP AT LIMIT OF CONSTRUCTION BOUNDRY	
SP12	6	1.5	(2)	-	-	-	CV9	STUB AND CAP AT LIMIT OF CONSTRUCTION BOUNDRY	
SP13	8	.75	(2)	-	-	-	PV9	STUB AND CAP AT LIMIT OF CONSTRUCTION BOUNDRY	
SP14	2	2	(2)	-	-	-	PV4	STUB AND CAP AT LIMIT OF CONSTRUCTION BOUNDRY	
SP15	2	2	(2)	-	-	-	CV1	CV2	
SP16	2	2	(2)	-	-	-	CV2	CV3	
SP17	2	2	(2)	-	-	-	CV3	CV4	
SP18	2	2	(2)	-	-	-	CV3	CV5	
SP19	2	2	(2)	-	-	-	CV5	CV6	
SP20	2	2	(2)	-	-	-	CV6	CV7	
SP21	2	2	(2)	-	-	-	CV7	CV8	
SP22	2	2	(2)	-	-	-	CV7	CV10	
SP23	2	4	(2)	-	-	-	PV1	PV2	
SP24	2	4	(2)	-	-	-	PV2	PV3	
SP25	2	4	(2)	-	-	-	PV3	PV4	
SP26	2	4	(2)	-	-	-	PV3	PV5	
SP27	2	4	(2)	-	-	-	PV5	PV6	
SP28	2	4	(2)	-	-	-	PV6	PV7	
SP29	2	4	(2)	-	-	-	PV7	PV8	
SP30	2	4	(2)	-	-	-	PV8	PV9	
SP31	2	4	(2)	-	-	-	PV7	PV10	
SP32	2	4	(2)	-	-	-	PV10	PV11	
SP33	2	2	(2)(4)	-	-	-	CV5	P3	(5)
SP34	1	1	(2)(4)	-	-	-	PV5	P3	(5)
SP35	2	2	(2)(4)	-	-	-	CV6	P4	(5)
SP36	1	1	(2)(4)	-	-	-	PV6	P4	(5)
SP37	2	2	(2)(4)	-	-	-	CV2	P2	(5)
SP38	1	1	(2)(4)	-	-	-	PV2	P2	(5)
SP39	2	2	(2)	-	-	-	(E)PANEL 4M	PV1	
SP40	2	1	(2)	-	-	-	HUT PANEL	PV11	
SP41	2	1	(2)(4)	-	-	-	PV11	P6	(5)
FOB1	5	2	(2)	(4)	-	-	HUT ITS/HUSKY RACK	CV11	(10)
FOB2	5	2	(2)	(4)	-	-	HUT POT RACK	CV11	(10)
FOB3	2	2	(2)(4)	(4)	-	-	CV11	POLE 6	(5)
FOB4	8	2	(2)	(4)	-	-	CV11	CV10	(10)(11)
FOB5	2	2	(2)	(4)	-	-	CV10	COMMUNICATIONS CABINET C	(10)
FOB6	8	2	(2)	(4)	-	-	CV10	CV7	(10)(11)
FOB7	6	2	(2)	(4)	-	-	CV7	CV8	(10)(11)
FOB8	4	2	(2)	(4)	-	-	CV8	CV9	
FOB9	2	2	(2)	(4)	-	-	CV8	COMMUNICATIONS CABINET B	(10)
FOB10	8	2	(2)	(4)	-	-	CV7	CV6	(10)(11)
FOB11	8	2	(2)	(4)	-	-	CV6	CV5	(10)(11)
FOB12	8	2	(2)	(4)	-	-	CV5	CV3	(10)(11)
FOB13	4	2	(2)	(4)	-	-	CV3	CV4	(10)(11)
FOB14	2	2	(2)	(4)	-	-	CV4	COMMUNICATIONS CABINET A	(10)
FOB15	2	2	(2)	(4)	-	-	CV3	CV2	
FOB16	2	2	(2)	(4)	-	-	CV2	CV1	
FOB17									NOT USED
FOB18	2	2	(2)	(4)	-	-	CV8	CV8A	(10)
FOB19	2	2	(2)	(4)	-	-	CV8A	POT COMM BOX POLE 9	(10)
FOB20	2	2	(2)	(4)	-	-	CV7	HUSKY COMM BOX POLE 5	(10)
FOB21	2	2	(2)	(4)	-	-	CV7	POT COMM BOX POLE 5	(10)
FOB22	2	2	(2)	(4)	-	-	CV5	HUSKY COMM BOX POLE 2	(10)
FOB23	2	2	(2)	(4)	-	-	CV5	POT COMM BOX POLE 2	(10)
FOB24	2	2	(2)	(4)	-	-	CV4	CV4A	(10)
FOB25	2	2	(2)	(4)	-	-	CV4A	POT COMM BOX POLE 12	(10)

CONDUIT AND CONDUCTOR SCHEDULE

CIRCUIT ID	CONDUIT NO.	CONDUIT SIZE	CONDUIT TYPE	CONDUCTORS PER CONDUIT NO.	CONDUCTORS PER CONDUIT SIZE	CONDUCTORS PER CONDUIT TYPE	FROM	TO	REMARKS
C1	2	1	(2)(4)	(9)	-	-	COMMUNICATIONS CABINET C	TROUBLE BOOTH	
C2	2	1	(2)(4)	(9)	-	-	CV4	COMMUNICATIONS CABINET A	
C3	1	1	(2)	(7)	-	-	COMMUNICATIONS CABINET A	GATE ARM #1	
C4	1	1	(2)	(7)	-	-	COMMUNICATIONS CABINET A	GATE ARM #2	
C5	1	1	(2)	(7)	-	-	COMMUNICATIONS CABINET A	GATE ARM #3	
C6	1	1	(2)	(9)	-	-	COMMUNICATIONS CABINET A	OCR #1	
C7	1	2	(2)	(9)	-	-	COMMUNICATIONS CABINET A	OCR #2	
C8	1	2	(2)	(9)	-	-	COMMUNICATIONS CABINET A	OCR #3	
C9	2	2	(2)	(9)	-	-	COMMUNICATIONS CABINET B	CV8	
C10	1	1.5	(2)	(9)	-	-	CV8	T-POLE #1	
C11	1	1.5	(2)	(9)	-	-	CV8	T-POLE #2	
C12	1	1.5	(2)	(9)	-	-	CV8	T-POLE #3	
C13	1	1.5	(2)	(9)	-	-	CV8	T-POLE #4	
C14	1	1.5	(2)	(9)	-	-	CV8	T-POLE #5	
C15	3	2	(2)	(9)	-	-	COMMUNICATIONS CABINET B	CV9	
C16	3	2	(2)	(9)	-	-	COMMUNICATIONS CABINET B	CV8	
C17	1	1.5	(2)	(9)	-	-	COMMUNICATIONS CABINET B	CHASSIS CAMERA PEDESTAL #1	
C18	1	1.5	(2)	(9)	-	-	COMMUNICATIONS CABINET B	CHASSIS CAMERA PEDESTAL #2	
C19	1	1.5	(2)	(9)	-	-	COMMUNICATIONS CABINET B	CHASSIS CAMERA PEDESTAL #3	
C20	1	1.5	(2)	(9)	-	-	COMMUNICATIONS CABINET B	CHASSIS CAMERA PEDESTAL #4	
C21	1	1.5	(2)	(9)	-	-	COMMUNICATIONS CABINET B	CHASSIS CAMERA PEDESTAL #5	
C22	1	1.5	(2)	(9)	-	-	CV9	TRUCK INTERCOM PEDESTAL #1	
C23	1	1.5	(2)	(9)	-	-	CV9	TRUCK INTERCOM PEDESTAL #2	
C24	1	1.5	(2)	(9)	-	-	CV9	TRUCK INTERCOM PEDESTAL #3	
C25	1	1.5	(2)	(9)	-	-	CV9	TRUCK INTERCOM PEDESTAL #4	
C26	1	1.5	(2)	(9)	-	-	CV9	TRUCK INTERCOM PEDESTAL #5	
C27	1	1.5	(2)	(9)	-	-	CV9	TRUCK INTERCOM PEDESTAL #6	
C28	1	1.5	(2)	(9)	-	-	CV9	TRUCK INTERCOM PEDESTAL #7	
C29	1	1.5	(2)	(9)	-	-	CV9	TRUCK INTERCOM PEDESTAL #8	
C30	1	1.5	(2)	(9)	-	-	CV9	TRUCK INTERCOM PEDESTAL #9	

CROSS ENGINEERS, INC
923 MLK Jr. Way
Tacoma, WA 98405
info@crossengineers.com
Phone: (253) 235-0118
Job Number: 18-032

mafratt & nichol
600 UNIVERSITY STREET
SUITE #10
SEATTLE, WA 98101
(206) 622-4022

MARK:	REVISION:	BY:	APPR:	DATE:

CHECKED BY DATE

PROJ. ENGR DATE

PRINTED BY: ScottK Nov 20, 2019

SITE ADDRESS: 1281 PIER G WAY LONG BEACH, CA 90802

LOT F REDEVELOPMENT
HUSKY PROCESSING LANES
CONDUIT AND CONDUCTOR SCHEDULE

TOWNSHIP: 21N | RANGE: 3E | SECTION: 34

DAT-HRZ: WA83/2011 | VERT: MLLW 19.18' @ TIDE 22 1933

PHASE: 90% DESIGN | PARCEL: N/A | DRAWING SCALE: AS NOTED

E11

46 OF 59

THIS DRAWING IS THE PROPERTY OF THE PORT OF TACOMA AND SHALL NOT BE USED ON OTHER WORK, DISCLOSED, COPIED, IN WHOLE OR IN PART, WITHOUT WRITTEN PERMISSION

BINDING EDGE

PORT OF TACOMA FILE: N:\Jobs\2018\18-032\Dwgs\18-032-E11

BINDING EDGE

VAULT SCHEDULE			
ID	DESCRIPTION	LOADING	NOTES
PV1-PV11	CUSTOM 600V POWER VAULTS, SEE DETAIL A, THIS SHEET BY ITS/HUSKY CONTRACTOR	MINIMUM 125 KIP.	1 2 3 4 5 6
CV1-CV11,CV8B	CUSTOM COMMUNICATION VAULT SEE DETAIL A, THIS SHEET BY ITS/HUSKY CONTRACTOR	MINIMUM 125 KIP.	1 2 3 4 5 6
PV4A,PV8A	CUSTOM 600V POWER VAULTS, SEE DETAIL A, THIS SHEET BY POT CONTRACTOR NIC	MINIMUM 125 KIP.	2 3 4 5 6 7
CV4A,CV8A	CUSTOM COMMUNICATION VAULT SEE DETAIL A, THIS SHEET BY POT CONTRACTOR NIC	MINIMUM 125 KIP.	2 3 4 5 6 7

VAULT SCHEDULE NOTES:

1. ALL CONDUITS (2" AND LARGER) ENTERING OR LEAVING VAULTS SHALL USE TERM-A-DUCTS. ALL 3/4" AND 1" CONDUITS ENTERING OR LEAVING VAULTS MAY USE BLOCK-OUTS WITH BELL ENDS AND GROUTED. PROVIDE REMOVABLE FOAM FILL IN ALL EMPTY CONDUIT OPENINGS. PROVIDE PULL STRINGS IN ALL EMPTY CONDUITS. PROVIDE MAXCELL EDGE DETECTABLE MXC2003 (3 CELL) OR EQUAL IN ALL FOB LABELED COMMUNICATIONS CONDUITS. ITS/HUSKY CONTRACTOR SHALL PROVIDE CONDUIT LABELS FOR ALL CONDUITS ENTERING AND LEAVING VAULTS. PROVIDE PHENOLIC LABEL ATTACHED TO VAULT WALL WITH TWO (2) PLASTIC INSERTS AND STAINLESS STEEL SCREWS ADJACENT TO EACH CONDUIT. PHENOLIC LABEL SHALL HAVE CONDUIT ID ENGRAVED AS INDICATED ON CONDUIT AND WIRE SCHEDULE DRAWINGS.
2. SEE SPECIFICATION SECTION 26 71 19 FOR ADDITIONAL VAULT INSTALLATION REQUIREMENTS.
3. ALL WIRE (POWER AND COMMUNICATIONS) SHALL COMPLETELY LOOP AROUND VAULT WALLS PRIOR TO EXITING VAULT.
4. CONTRACTOR SHALL PROVIDE CAST LABEL ON LID TO READ "ELECTRIC" OR "COMMUNICATIONS". PROVIDE FIELD STAMPED LABEL ON LID WITH VAULT ID TO MATCH ELECTRICAL SITE PLANS.
5. PROVIDE BOLTED GROUND LUG(S) ON LID AND FRAME. PROVIDE #2 BARE CU GROUND IN EACH VAULT TO TWO (2) 3/4" X 10'-0" GROUND RODS.
6. PROVIDE STENCIL PAINTED, VAULT KIP RATING ON INSIDE OF VAULT DIRECTLY BELOW LID. MINIMUM 4" HIGH LETTERS.
7. ALL CONDUITS (2" AND LARGER) ENTERING OR LEAVING VAULTS SHALL USE TERM-A-DUCTS. ALL 3/4" AND 1" CONDUITS ENTERING OR LEAVING VAULTS MAY USE BLOCK-OUTS WITH BELL ENDS AND GROUTED. PROVIDE REMOVABLE FOAM FILL IN ALL EMPTY CONDUIT OPENINGS. PROVIDE PULL STRINGS IN ALL EMPTY CONDUITS. PROVIDE MAXCELL EDGE DETECTABLE MXC2003 (3 CELL) OR EQUAL IN ALL FOB LABELED COMMUNICATIONS CONDUITS. POT CONTRACTOR SHALL PROVIDE CONDUIT LABELS FOR ALL CONDUITS ENTERING AND LEAVING VAULTS. PROVIDE PHENOLIC LABEL ATTACHED TO VAULT WALL WITH TWO (2) PLASTIC INSERTS AND STAINLESS STEEL SCREWS ADJACENT TO EACH CONDUIT. PHENOLIC LABEL SHALL HAVE CONDUIT ID ENGRAVED AS INDICATED ON CONDUIT AND WIRE SCHEDULE DRAWINGS.

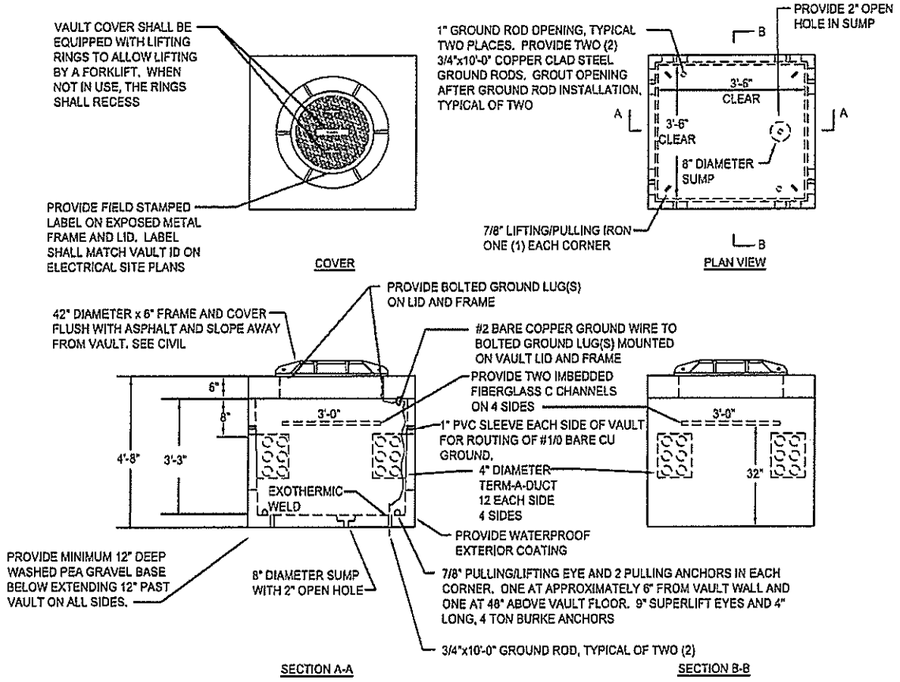

TYPICAL SITE POWER/ COMMUNICATIONS VAULTS

NOT TO SCALE

A / E12

CROSS ENGINEERS, INC
923 MLK Jr. Way
Tacoma WA 98405
info@crossengineers.com
Phone: (253) 759-0118
Job Number: 18-032

ITS. HUSKY

mollatt & nichol
600 UNIVERSITY STREET SUITE# 610 SEATTLE WA 98101 (206) 624-0822

MARK:	REVISION:	BY:	APPR:	DATE:

CHECKED BY | DATE

PROJ. ENGR | DATE

PRINTED BY: ScottK Nov 20, 2019

SITE ADDRESS: 1281 PIER G WAY LONG BEACH, CA 90802

LOT F REDEVELOPMENT
HUSKY PROCESSING LANES
ELECTRICAL VAULT DETAILS

TOWNSHIP: 21N | RANGE: 3E | SECTION: 34
DAT-HRZ: WA83/2011-GRT: MLLW 19.18' @ TIDE 22 1933
PARCEL: N/A | DRAWING SCALE: AS NOTED

PHASE: 90% DESIGN

E12
47 OF 59

THIS DRAWING IS THE PROPERTY OF THE PORT OF TACOMA AND SHALL NOT BE USED ON OTHER WORK, DISCLOSED, COPIED, IN WHOLE OR IN PART, WITHOUT WRITTEN PERMISSION

PORT OF TACOMA FILE: N:\Jobs\2018\18-032\Dwgs\18-032-E12

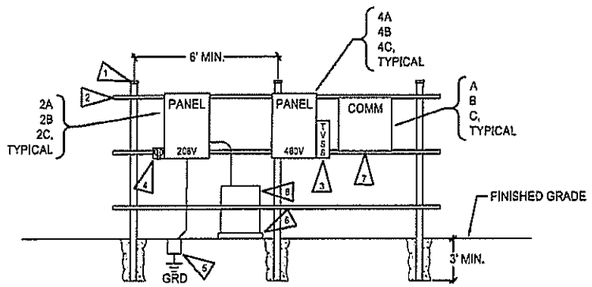

ELEVATION

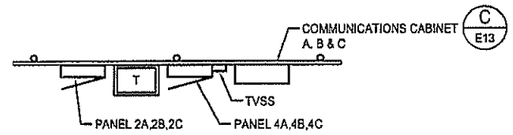

PLAN VIEW

EQUIPMENT MOUNTING TYPICAL (3) LOCATIONS (A / E13)

NOT TO SCALE

NOTE: AT PANEL LOCATION 4A THE ITS/HUSKY WEIGH-IN MOTION VENDOR WILL PROVIDE TWO(2) ADDITIONAL CABINETS NOT SHOWN AT THIS LOCATION. PROVIDE (1) ADDITIONAL POST WITH STRUTS. CABINETS SHALL BE MOUNTED ON EAST SIDE OF STRUT ONLY.

ELECTRICAL NOTES:

1. PROVIDE 8'-0" SECTION OF 3" RIGID GALVANIZED STEEL CONDUIT WITH THREADED END CAP. PROVIDE 8" ROUND x 3'-0" DEEP, 3000 PSI CONCRETE BASE AND EMBED CONDUIT 3'-0" BELOW FINISHED GRADE. PAINTED OVER GALVANIZE, 2 COATS SAFETY YELLOW, TYPICAL OF TWO(2) EACH LOCATION.
2. PROVIDE (3)1-5/8" HOT DIP, PAINTED (2 COATS SAFETY YELLOW) OVER GALVANIZED STRUT EACH SIDE BETWEEN RIGID STEEL CONDUIT POSTS FOR MOUNTING EQUIPMENT. DRILL CONDUIT AND PROVIDE STAINLESS STEEL MOUNTING HARDWARE FOR STRUT AND EQUIPMENT MOUNTING AT EACH LOCATION.
3. PROVIDE NEMA 3R, TRANSIENT SURGE PROTECTIVE DEVICE (TVSS). SIEMENS TPS3E1115D2 OR EQUAL. PROVIDE 3/4" CONDUIT NIPPLE AND 5#10 CU, WITH 30/3P CIRCUIT BREAKER IN PANEL.
4. PROVIDE 120V, 20A, GFCI DUPLEX RECEPTACLE WITH A NEMA 3R "IN-USE" COVER. PROVIDE 3/4"CONDUIT NIPPLE AND 2-#12 CU CONDUCTORS, PLUS GROUND AND CONNECT TO PANEL.
5. PROVIDE (2)10'-0" x 3/4" COPPER CLAD STEEL GROUND RODS SPACED NO LESS THAN 10 FEET APART. PROVIDE (1) GROUND WELL (ERITECH #T416F WITH COVER OR EQUAL). PROVIDE 3/4"PVCRS-#6 BARE CU TO GROUND WELL AND BETWEEN EACH GROUND ROD. CONNECT TO POWER PANEL AND COMMUNICATIONS BOX.
6. PROVIDE 4" CONCRETE PAD, 3000 PSI, EXTENDING 6" PAST TRANSFORMER FOOTPRINT ON ALL SIDES. BOLT TRANSFORMER TO CONCRETE PAD.
7. PROVIDE NEMA 4X, 36"W x 36"H x 12"D, 316 STAINLESS STEEL ENCLOSURE WITH HINGED AND PADLOCKABLE DOOR, DIN RAIL AND GROUND BAR. PROVIDE MOTOR RATED TOGGLE SWITCH, (2)DUPLEX 20A, 125V RECEPTACLES IN SINGLE BOX WITH COVER IN LOWER RIGHT HAND CORNER. ITS/HUSKY COMMUNICATIONS SYSTEMS VENDOR WILL PROVIDE COMMUNICATIONS EQUIPMENT. PULL WIRE AND TERMINATE IN CABINET AND AT EQUIPMENT.
8. NEMA 3R, 304 STAINLESS STEEL, PAINTED, DRY-TYPE TRANSFORMER, 25KVA, 480V TO 240V, 1PH ON 4" HIGH CONCRETE PAD.

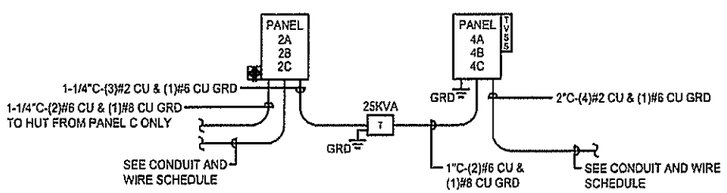

PARTIAL POWER RISER DIAGRAM - TYPICAL (B / E13)

NOT TO SCALE

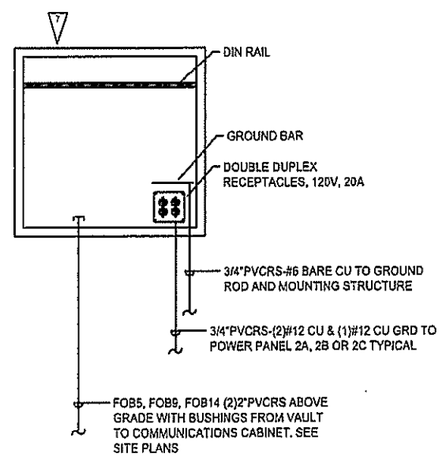

HUSKY COMMUNICATIONS CABINET A, B & C (C / E13)

NOT TO SCALE

CROSS ENGINEERS, INC
923 MLK Jr. Way
Tacoma, WA 98405
info@crossengineers.com
Phone: (253) 759-0118
Job Number: 18-022

moffatt & nichol
600 UNIVERSITY STREET
SUITE# 610
SEATTLE, WA 98101
(206) 624-0222

MARK:	REVISION:	BY:	APPR:	DATE:

CHECKED BY — DATE

PROJ. ENGR — DATE

LOT F REDEVELOPMENT
HUSKY PROCESSING LANES
ELECTRICAL EQUIPMENT/ COMMUNICATIONS
CABINET DETAILS

TOWNSHIP: 21N | RANGE: 3E | SECTION: 34
DAT-HRZ: WA83/2011 | DATUM: MLLW 19.18' @ TIDE 22 1933
PARCEL: N/A | DRAWING SCALE: AS NOTED
PHASE: 90% DESIGN

PRINTED BY: Scottk Nov 20, 2019
SITE ADDRESS: 1281 PIER G WAY
LONG BEACH, CA 90802

E13
48 OF 59

THIS DRAWING IS THE PROPERTY OF THE PORT OF TACOMA AND SHALL NOT BE USED ON OTHER WORK, DISCLOSED, COPIED, IN WHOLE OR IN PART, WITHOUT WRITTEN PERMISSION

BINDING EDGE
PORT OF TACOMA FILE: N:\Jobs\2018\18-032\Dwgs\18-032-E13

NEMA 3R, 316 STAINLESS STEEL

PANEL SCHEDULE

SURFACE MOUNTING
10,000 AIC

NO. 4A — LOCATION: LOT F — SERVING: EQUIPMENT — 480/277 VOLTS 3PHASE 4WIRE — 100 AMPS WITH 100 MAIN BREAKER

CKT NO.	LOAD DESCRIPTION	KVA	TRIP AMPS		TRIP AMPS	KVA	LOAD DESCRIPTION	CKT NO.
1	PANEL 2A VIA	4.60	60		20		SPARE	2
3	25KVA XFMR		2		20		SPARE	4
5	SPARE		20		20		SPARE	6
7	UNIT SUB POLE #2	5.00	30				SPACE	8
9			2					10
11	UNIT SUB POLE #12	5.00	30					12
13			2					14
15	TVSS	-	30					16
17								18
19			3				SPACE	20

REMARKS: .

CONNECTED LOAD: 14.6 KVA 18 AMPS
DEMAND LOAD: 14.6 KVA 18 AMPS

PROVIDE HANDLE TIES FOR ALL MULTI-CIRCUIT HOMERUNS SHARING A NEUTRAL PER THE NATIONAL ELECTRIC CODE ARTICLE 210.4 MULTIWIRE BRANCH CIRCUITS, PART (B) DISCONNECTING MEANS. DRAWINGS ARE DIAGRAMMATIC. WHERE THE CONTRACTOR MODIFIES THE CIRCUITING, THE CONTRACTOR SHALL PROVIDE AN INDIVIDUAL NEUTRAL PER CIRCUIT, MULTI-POLE CIRCUIT BREAKERS, OR CIRCUIT BREAKER HANDLE TIE TO MEET THE NEC ARTICLE. ALL COSTS ASSOCIATED WITH MODIFICATIONS SHALL BE INCLUDED IN THE CONTRACTOR'S BID.

PANEL 4A LOAD CALCULATIONS

SERVICE	KVA LOAD		FACTOR	NEC REF.		DEMAND LOAD
LIGHTING	-	X	1.25	220.19(A)(1)	=	-
RECEPTS TO 10KW	-	X	1.00	220.44	=	-
RECEPTS OVER 10KW	-	X	0.50	220.44	=	-
MOTORS (LARGEST)	-	X	1.25	430.24	=	-
MOTORS	-	X	1.00	430.24	=	-
KITCHEN EQUIP.	-	X	1.00	220.56	=	-
WELDERS	-	X	1.00	630.11(B)	=	-
AIR CONDITIONING	-	X	1.00	220.50	=	-
ELECTRIC HEAT	-	X	1.00	220.51	=	-
MISCELLANEOUS	14.60	X	1.00		=	14.60
TOTAL CONNECTED	14.6 KVA (18 AMPS)			TOTAL DEMAND		14.6 KVA (18 AMPS)

NEMA 3R, 316 STAINLESS STEEL

PANEL SCHEDULE

SURFACE MOUNTING
10,000 AIC

NO. 4B — LOCATION: LOT F — SERVING: EQUIPMENT — 480/277 VOLTS 3PHASE 4WIRE — 100 AMPS WITH 100 MAIN BREAKER

CKT NO.	LOAD DESCRIPTION	KVA	TRIP AMPS		TRIP AMPS	KVA	LOAD DESCRIPTION	CKT NO.
1	PANEL 2B VIA	5.00	60		20		SPARE	2
3	25KVA XFMR		2		20		SPARE	4
5	SPARE		20		20		SPARE	6
7	UNIT SUB POLE #5	5.00	30				SPACE	8
9			2					10
11	UNIT SUB POLE #9	5.00	30					12
13			2					14
15	TVSS	-	30					16
17								18
19			3				SPACE	20

REMARKS: .

CONNECTED LOAD: 15.0 KVA 18 AMPS
DEMAND LOAD: 15.0 KVA 18 AMPS

PROVIDE HANDLE TIES FOR ALL MULTI-CIRCUIT HOMERUNS SHARING A NEUTRAL PER THE NATIONAL ELECTRIC CODE ARTICLE 210.4 MULTIWIRE BRANCH CIRCUITS, PART (B) DISCONNECTING MEANS. DRAWINGS ARE DIAGRAMMATIC. WHERE THE CONTRACTOR MODIFIES THE CIRCUITING, THE CONTRACTOR SHALL PROVIDE AN INDIVIDUAL NEUTRAL PER CIRCUIT, MULTI-POLE CIRCUIT BREAKERS, OR CIRCUIT BREAKER HANDLE TIE TO MEET THE NEC ARTICLE. ALL COSTS ASSOCIATED WITH MODIFICATIONS SHALL BE INCLUDED IN THE CONTRACTOR'S BID.

PANEL 4B LOAD CALCULATIONS

SERVICE	KVA LOAD		FACTOR	NEC REF.		DEMAND LOAD
LIGHTING	-	X	1.25	220.19(A)(1)	=	-
RECEPTS TO 10KW	-	X	1.00	220.44	=	-
RECEPTS OVER 10KW	-	X	0.50	220.44	=	-
MOTORS (LARGEST)	-	X	1.25	430.24	=	-
MOTORS	-	X	1.00	430.24	=	-
KITCHEN EQUIP.	-	X	1.00	220.56	=	-
WELDERS	-	X	1.00	630.11(B)	=	-
AIR CONDITIONING	-	X	1.00	220.50	=	-
ELECTRIC HEAT	-	X	1.00	220.51	=	-
MISCELLANEOUS	10.00	X	1.00		=	10.00
TOTAL CONNECTED	15.0 KVA (18 AMPS)			TOTAL DEMAND		15.0 KVA (18 AMPS)

NEMA 3R, 316 STAINLESS STEEL

PANEL SCHEDULE

SURFACE MOUNTING
10,000 AIC

NO. 4C — LOCATION: LOT F — SERVING: EQUIPMENT — 480/277 VOLTS 3PHASE 4WIRE — 100 AMPS WITH 100 MAIN BREAKER

CKT NO.	LOAD DESCRIPTION	KVA	TRIP AMPS		TRIP AMPS	KVA	LOAD DESCRIPTION	CKT NO.
1	PANEL 2C VIA	6.40	60		20		SPARE	2
3	25KVA XFMR		2		20		SPARE	4
5	SPACE				20		SPARE	6
7							SPACE	8
9								10
11								12
13	SPACE							14
15	TVSS	-	30					16
17								18
19			3				SPACE	20

REMARKS: .

CONNECTED LOAD: 6.4 KVA 8 AMPS
DEMAND LOAD: 6.4 KVA 8 AMPS

PROVIDE HANDLE TIES FOR ALL MULTI-CIRCUIT HOMERUNS SHARING A NEUTRAL PER THE NATIONAL ELECTRIC CODE ARTICLE 210.4 MULTIWIRE BRANCH CIRCUITS, PART (B) DISCONNECTING MEANS. DRAWINGS ARE DIAGRAMMATIC. WHERE THE CONTRACTOR MODIFIES THE CIRCUITING, THE CONTRACTOR SHALL PROVIDE AN INDIVIDUAL NEUTRAL PER CIRCUIT, MULTI-POLE CIRCUIT BREAKERS, OR CIRCUIT BREAKER HANDLE TIE TO MEET THE NEC ARTICLE. ALL COSTS ASSOCIATED WITH MODIFICATIONS SHALL BE INCLUDED IN THE CONTRACTOR'S BID.

PANEL 4C LOAD CALCULATIONS

SERVICE	KVA LOAD		FACTOR	NEC REF.		DEMAND LOAD
LIGHTING	-	X	1.25	220.19(A)(1)	=	-
RECEPTS TO 10KW	-	X	1.00	220.44	=	-
RECEPTS OVER 10KW	-	X	0.50	220.44	=	-
MOTORS (LARGEST)	-	X	1.25	430.24	=	-
MOTORS	-	X	1.00	430.24	=	-
KITCHEN EQUIP.	-	X	1.00	220.56	=	-
WELDERS	-	X	1.00	630.11(B)	=	-
AIR CONDITIONING	-	X	1.00	220.50	=	-
ELECTRIC HEAT	-	X	1.00	220.51	=	-
MISCELLANEOUS	6.40	X	1.00		=	6.40
TOTAL CONNECTED	6.4 KVA (8 AMPS)			TOTAL DEMAND		6.4 KVA (8 AMPS)

NEMA 3R, 316 STAINLESS STEEL

PANEL SCHEDULE

SURFACE MOUNTING
10,000 AIC

NO. 2A — LOCATION: LOT F — SERVING: EQUIPMENT — 120/240 VOLTS 1PH 3WIRE — 100 AMPS WITH 100 MAIN BREAKER

CKT NO.	LOAD DESCRIPTION	KVA	TRIP AMPS		TRIP AMPS	KVA	LOAD DESCRIPTION	CKT NO.
1	COMMUNICATIONS PANEL A	.72	20		20	.18	ENTRY PEDESTAL #1	2
3	SPARE					.18	ENTRY PEDESTAL #2	4
5						.18	ENTRY PEDESTAL #3	6
7						.70	GATE ARM #1	8
9						.70	GATE ARM #2	10
11						.70	GATE ARM #3	12
13						.90	OCR #1	14
15						.90	OCR #2	16
17						.90	OCR #3	18
19	SPARE		20		20	.18	RECEPTACLE	20

REMARKS: .

CONNECTED LOAD: 4.6 KVA 19 AMPS
DEMAND LOAD: 4.6 KVA 19 AMPS

PROVIDE HANDLE TIES FOR ALL MULTI-CIRCUIT HOMERUNS SHARING A NEUTRAL PER THE NATIONAL ELECTRIC CODE ARTICLE 210.4 MULTIWIRE BRANCH CIRCUITS, PART (B) DISCONNECTING MEANS. DRAWINGS ARE DIAGRAMMATIC. WHERE THE CONTRACTOR MODIFIES THE CIRCUITING, THE CONTRACTOR SHALL PROVIDE AN INDIVIDUAL NEUTRAL PER CIRCUIT, MULTI-POLE CIRCUIT BREAKERS, OR CIRCUIT BREAKER HANDLE TIE TO MEET THE NEC ARTICLE. ALL COSTS ASSOCIATED WITH MODIFICATIONS SHALL BE INCLUDED IN THE CONTRACTOR'S BID.

PANEL 2A LOAD CALCULATIONS

SERVICE	KVA LOAD		FACTOR	NEC REF.		DEMAND LOAD
LIGHTING	-	X	1.25	220.19(A)(1)	=	-
RECEPTS TO 10KW	-	X	1.00	220.44	=	-
RECEPTS OVER 10KW	-	X	0.50	220.44	=	-
MOTORS (LARGEST)	-	X	1.25	430.24	=	-
MOTORS	-	X	1.00	430.24	=	-
KITCHEN EQUIP.	-	X	1.00	220.56	=	-
WELDERS	-	X	1.00	630.11(B)	=	-
AIR CONDITIONING	-	X	1.00	220.50	=	-
ELECTRIC HEAT	-	X	1.00	220.51	=	-
MISCELLANEOUS	4.64	X	1.00		=	4.64
TOTAL CONNECTED	4.6 KVA (19 AMPS)			TOTAL DEMAND		4.6 KVA (19 AMPS)

NEMA 3R, 316 STAINLESS STEEL

PANEL SCHEDULE

SURFACE MOUNTING
10,000 AIC

NO. 2B — LOCATION: LOT F — SERVING: EQUIPMENT — 120/240 VOLTS 1PH 3WIRE — 100 AMPS WITH 100 MAIN BREAKER

CKT NO.	LOAD DESCRIPTION	KVA	TRIP AMPS		TRIP AMPS	KVA	LOAD DESCRIPTION	CKT NO.
1	COMMUNICATIONS PANEL B	.72	20		20		SPARE	2
3	T-POLE #1	.20					SPARE	4
5	T-POLE #2	.20					SPARE	6
7	T-POLE #3	.20				.30	CHASSIS CAMERA #1	8
9	T-POLE #4	.20				.30	CHASSIS CAMERA #2	10
11	T-POLE #5	.20				.30	CHASSIS CAMERA #3	12
13	TRUCK INTERCOM #1,2	.36				.30	CHASSIS CAMERA #4	14
15	TRUCK INTERCOM #3,4	.36				.30	CHASSIS CAMERA #5	16
17	TRUCK INTERCOM #5,6	.36				.18	RECEPTACLE	18
19	TRUCK INTERCOM #7,8	.36	20		20	.18	TRUCK INTERCOM #9	20

REMARKS: .

CONNECTED LOAD: 5.0 KVA 21 AMPS
DEMAND LOAD: 5.0 KVA 21 AMPS

PROVIDE HANDLE TIES FOR ALL MULTI-CIRCUIT HOMERUNS SHARING A NEUTRAL PER THE NATIONAL ELECTRIC CODE ARTICLE 210.4 MULTIWIRE BRANCH CIRCUITS, PART (B) DISCONNECTING MEANS. DRAWINGS ARE DIAGRAMMATIC. WHERE THE CONTRACTOR MODIFIES THE CIRCUITING, THE CONTRACTOR SHALL PROVIDE AN INDIVIDUAL NEUTRAL PER CIRCUIT, MULTI-POLE CIRCUIT BREAKERS, OR CIRCUIT BREAKER HANDLE TIE TO MEET THE NEC ARTICLE. ALL COSTS ASSOCIATED WITH MODIFICATIONS SHALL BE INCLUDED IN THE CONTRACTOR'S BID.

PANEL 2B LOAD CALCULATIONS

SERVICE	KVA LOAD		FACTOR	NEC REF.		DEMAND LOAD
LIGHTING	-	X	1.25	220.19(A)(1)	=	-
RECEPTS TO 10KW	-	X	1.00	220.44	=	-
RECEPTS OVER 10KW	-	X	0.50	220.44	=	-
MOTORS (LARGEST)	-	X	1.25	430.24	=	-
MOTORS	-	X	1.00	430.24	=	-
KITCHEN EQUIP.	-	X	1.00	220.56	=	-
WELDERS	-	X	1.00	630.11(B)	=	-
AIR CONDITIONING	-	X	1.00	220.50	=	-
ELECTRIC HEAT	-	X	1.00	220.51	=	-
MISCELLANEOUS	5.02	X	1.00		=	5.02
TOTAL CONNECTED	5.0 KVA (21 AMPS)			TOTAL DEMAND		5.0 KVA (21 AMPS)

NEMA 3R, 316 STAINLESS STEEL

PANEL SCHEDULE

SURFACE MOUNTING
10,000 AIC

NO. 2C — LOCATION: LOT F — SERVING: HUT/TROUBLE BOOTH — 120/240 VOLTS 1PH 3WIRE — 100 AMPS WITH 100 MAIN BREAKER

CKT NO.	LOAD DESCRIPTION	KVA	TRIP AMPS		TRIP AMPS	KVA	LOAD DESCRIPTION	CKT NO.
1	SPACE				20	1.00	TROUBLE BOOTH	2
3						1.00	TROUBLE BOOTH	4
5						.18	RECEPTACLE	6
7							SPARE	8
9					20		SPARE	10
11							SPACE	12
13							SPACE	14
15							SPACE	16
17					60	4.20	COMMUNICATIONS HUT	18
19	SPACE				2			20

REMARKS: .

CONNECTED LOAD: 6.4 KVA 27 AMPS
DEMAND LOAD: 6.4 KVA 27 AMPS

PROVIDE HANDLE TIES FOR ALL MULTI-CIRCUIT HOMERUNS SHARING A NEUTRAL PER THE NATIONAL ELECTRIC CODE ARTICLE 210.4 MULTIWIRE BRANCH CIRCUITS, PART (B) DISCONNECTING MEANS. DRAWINGS ARE DIAGRAMMATIC. WHERE THE CONTRACTOR MODIFIES THE CIRCUITING, THE CONTRACTOR SHALL PROVIDE AN INDIVIDUAL NEUTRAL PER CIRCUIT, MULTI-POLE CIRCUIT BREAKERS, OR CIRCUIT BREAKER HANDLE TIE TO MEET THE NEC ARTICLE. ALL COSTS ASSOCIATED WITH MODIFICATIONS SHALL BE INCLUDED IN THE CONTRACTOR'S BID.

PANEL 2C LOAD CALCULATIONS

SERVICE	KVA LOAD		FACTOR	NEC REF.		DEMAND LOAD
LIGHTING	-	X	1.25	220.19(A)(1)	=	-
RECEPTS TO 10KW	.18	X	1.00	220.44	=	.18
RECEPTS OVER 10KW	-	X	0.50	220.44	=	-
MOTORS (LARGEST)	-	X	1.25	430.24	=	-
MOTORS	-	X	1.00	430.24	=	-
KITCHEN EQUIP.	-	X	1.00	220.56	=	-
WELDERS	-	X	1.00	630.11(B)	=	-
AIR CONDITIONING	-	X	1.00	220.50	=	-
ELECTRIC HEAT	-	X	1.00	220.51	=	-
MISCELLANEOUS	6.20	X	1.00		=	6.20
TOTAL CONNECTED	6.4 KVA (27 AMPS)			TOTAL DEMAND		6.4 KVA (27 AMPS)

CROSS ENGINEERS, INC
925 MLK Jr. Way
Tacoma WA 98405
Info@crossengineers.com
Phone: (253) 759-0118
Job Number: 18-037

BINDING EDGE

PORT OF TACOMA FILE: N:\Jobs\2018\18-032\Dwgs\18-032-E14

husky
DATE:
APPR:
BY:
REVISION:
MARK:

moffatt & nichol
600 UNIVERSITY STREET
SUITE#610
SEATTLE, WA 98101
(206) 622-4222

DATE
CHECKED BY
DATE
PROJ. ENGR
PRINTED BY: Scott K Nov 20, 2019
SITE ADDRESS: 1281 PIER G WAY
LONG BEACH, CA 90802

LOT F REDEVELOPMENT
HUSKY PROCESSING LANES
ELECTRICAL PANEL SCHEDULES

E14
49 OF 59

TOWNSHIP: 21N | RANGE: 3E | SECTION: 34
DAT-HRZ: WA83/2011 | VERT: MLLW 19.18' @ TIDE 22 19.33
PHASE: 90% DESIGN | PARCEL: N/A | DRAWING SCALE: AS NOTED

THIS DRAWING IS THE PROPERTY OF THE PORT OF TACOMA AND SHALL NOT BE USED ON OTHER WORK, DISCLOSED, COPIED, IN WHOLE OR IN PART, WITHOUT WRITTEN PERMISSION

BINDING EDGE

ELECTRICAL NOTES:

1. TWO (2) 2"C STUBBED 5' PAST EXISTING CURB, SAW CUT CURB, ASPHALT AND REMOVAL, BY POTM. FO CABLE FROM HUT AND TERMINATION BY PORT CONTRACTOR FOR POT COMMUNICATION BOX AND BY ITS/HUSKY CONTRACTOR FOR ITS/HUSKY COMMUNICATIONS BOX.
2. ONE (1)1"C STUBBED 5' PAST EXISTING CURB. SAWCUT CURB, ASPHALT, AND REMOVAL BY POTM. POWER CABLES IN CONDUIT BY ITS/HUSKY CONTRACTOR. SEE SHEETS E9, E10, E11.
3. 5KVA, NEMA 3R, 316 STAINLESS STEEL UNIT SUB, 480V, 1PH TO 120/240V, 1PH WITH TWELVE(12) CIRCUIT BREAKER SPACES AND SIX(6), 20/1P CIRCUIT BREAKERS. 3/4"PVCRS-(2)#12 CU & (1)#12 CU GRD, CAST 4 SQUARE BOX WITH 125V, 20A, GFI RECEPTACLE AND NEMA 3R "IN USE" COVER. FURNISHED AND INSTALLED BY POT CONTRACTOR.
4. 5KVA, NEMA 3R, 316 STAINLESS STEEL UNIT SUB, 480V, 1PH TO 120/240V, 1PH WITH TWELVE(12) CIRCUIT BREAKER SPACES AND SIX(6), 20/1P CIRCUIT BREAKERS. 3/4"PVCRS-(2)#12 CU & (1)#12 CU GRD, CAST 4 SQUARE BOX WITH 125V, 20A, GFI RECEPTACLE AND NEMA 3R "IN USE" COVER. FURNISHED AND INSTALLED BY ITS/HUSKY CONTRACTOR.

EQUIPMENT SCHEDULE

1. NEMA 4X, 316 STAINLESS STEEL, 36"x36"x12"D, HINGED, LATCHING AND PAD LOCKABLE COMMUNICATIONS CABINET. ITS/HUSKY CONTRACTOR PROVIDED.
2. DIN BAR(S) FOR MOUNTING EQUIPMENT INTERIOR TO COMMUNICATIONS CABINET. ITS/HUSKY CONTRACTOR PROVIDED.
3. MEDIA CONVERTER BLACKBOX. ITS/HUSKY FURNISHED, CONTRACTOR INSTALLED.
4. POWER SUPPLY. IT/HUSKY FURNISHED, CONTRACTOR INSTALLED.
5. CAST 2 OR 3-GANG BOX WITH COVER, MOTOR RATED TOGGLE SWITCH AND (1) OR (2)20A, 125V RECEPTACLES AS INDICATED. IT/HUSKY CONTRACTOR PROVIDED.
6. BULKHEAD. ITS/HUSKY FURNISHED, CONTRACTOR INSTALLED.
7. GROUND BAR. CONTRACTOR PROVIDED.
8. FIBER PATCH CORDS. IT/HUSKY FURNISHED, CONTRACTOR INSTALLED.
9. LS ANTENNA ITS/HUSKY FURNISHED CONTRACTOR INSTALLED AT P2 AND P5:
   (1)LS ANTENNA
   (1)POE POWER SUPPLY
   (1)MEDIA CONVERTER
   (1)SFP LC-1GB-LX
10. CAMERAS ITS/HUSKY FURNISHED CONTRACTOR INSTALLED AT P1, P6:
    (1)CAMERA MOUNT ADAPTER
    (1)CAMERA DOME
    (1)CAMERA MOUNT
    (1)CAMERA
    (1)POWER SUPPLY
    (1)MEDIA CONVERTER
    (1)SFP LC-1GB-LX

A

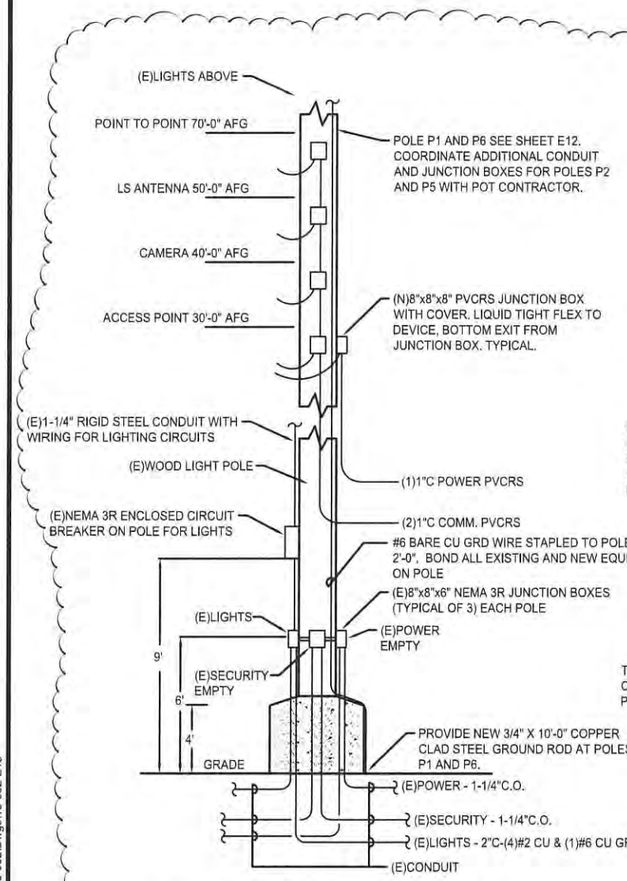

EXISTING LOT F WOOD LIGHT POLE/ BASE ELEVATION TYPICAL P1 THROUGH P12
NO SCALE

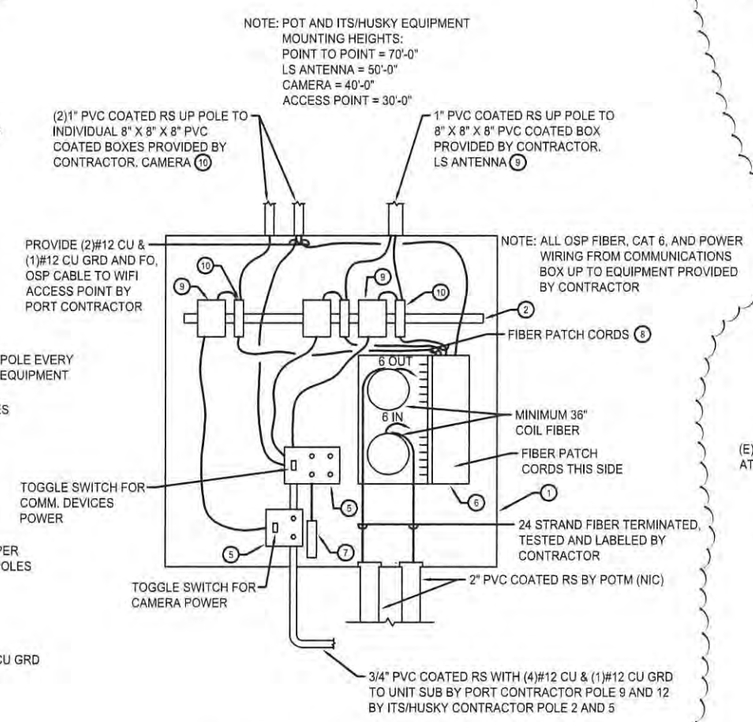

C / E15 ITS/HUSKY COMMUNICATIONS BOX
NO SCALE

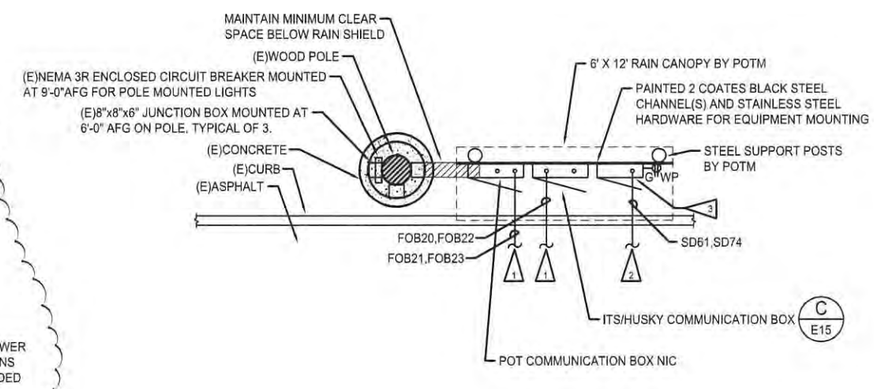

A / E15 POWER/COMMUNICATIONS AT POLES 2 AND 5
NO SCALE

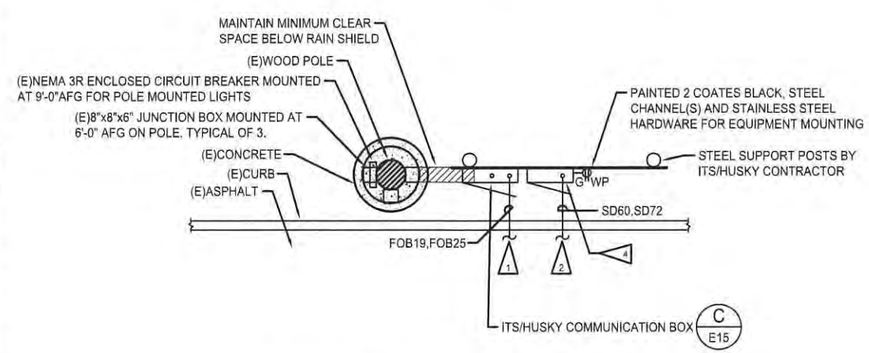

B / E15 POWER/COMMUNICATIONS AT POLE 1
NO SCALE

CROSS ENGINEERS, INC
923 MLK Jr. Way
Tacoma, WA 98405
info@crossengineers.com
Phone: (253) 759-0118
Job Number: 18-032

MARK:	REVISION:	BY:	APPR:	DATE:
A	ADDENDUM #A	SJK	GLW	12/11/19

moffatt & nichol
600 UNIVERSITY STREET SUITE# 610 SEATTLE, WA 98101 (206) 622-0222

STEVEN L. HUBBS STATE OF WASHINGTON REGISTERED PROFESSIONAL ENGINEER 12/11/19

		DATE
CHECKED BY	SLH	12-02-19
PROJ. ENGR	GLW	12-02-19

TOWNSHIP: 21N RANGE: 3E SECTION: 34
DAT-HRZ: WA83/2011 VERT: MLLW 19.18' @ TIDE 22 1933
PARCEL: N/A DRAWING SCALE: AS NOTED
PRINTED BY: ScottK Dec 11, 2019
SITE ADDRESS: 1281 PIER G WAY LONG BEACH, CA 90802
PHASE: BID SET

LOT F REDEVELOPMENT
HUSKY PROCESSING LANES
ELECTRICAL SYMBOLS/ ABBREVIATION LEGEND AND GENERAL NOTES

E15
50 OF 59

THIS DRAWING IS THE PROPERTY OF THE PORT OF TACOMA AND SHALL NOT BE USED ON OTHER WORK, DISCLOSED, COPIED, IN WHOLE OR IN PART, WITHOUT WRITTEN PERMISSION

PORT OF TACOMA FILE: N:\Jobs\2018\18-032\Dwgs\18-032-E15

LOT F REDEVELOPMENT

HUSKY PROCESSING LANES
TACOMA, WASHINGTON

ELEVATION DATUM:
MEAN LOWER LOW WATER (MLLW);
CONVERSION: MLLW DATUM MINUS 6.17' = NGVD 29 CITY OF TACOMA DATUM

HORIZONTAL DATUM:
NAD 83 (2007)

CONVERSION: PORT OF TACOMA DATUM MINUS N 0.22, E 0.00 = NAD 83/91 CITY OF TACOMA DATUM

SPECIAL TRAFFIC CONTROL REQUIREMENTS:

1. A MINIMUM OF ONE 20-FOOT WIDE ACCESS SHALL BE MAINTAINED TO ALL PROPERTIES AT ALL TIMES.
2. THREE (3) WORKING DAYS PRIOR TO ANY STREET OR LANE CLOSURE, THE CONTRACTOR SHALL NOTIFY:

TACOMA PUBLIC WORKS ENGINEERING DIVISION	(253) 591-5500
TACOMA PUBLIC WORKS STREETS AND GROUNDS	(253) 591-5495
TACOMA PUBLIC WORKS SOLID WASTE	(253) 591-5544
TACOMA FIRE DEPARTMENT	(253) 591-5733
TACOMA POLICE DEPARTMENT	(253) 591-5951
LESA COMMUNICATION CENTER	(253) 798-4721 OPT. #3

3. A TRAFFIC CONTROL PLAN SHALL BE SUBMITTED TO, AND APPROVED BY THE TACOMA PUBLIC WORKS, ENGINEERING DIVISION, PRIOR TO BEGINNING ANY WORK ON CITY RIGHT OF WAY.

GENERAL CONSTRUCTION SEQUENCE:

1. HOLD AND ATTEND PRE-CONSTRUCTION MEETING WITH THE CITY OF TACOMA CONSTRUCTION DIVISION AND BUILDING AND LAND USE SERVICE, TACOMA POWER, TACOMA WATER, PORT OF TACOMA, ENGINEER AND OTHERS AS APPLICABLE PRIOR TO COMMENCEMENT OF WORK.
2. STAKE PROJECT LIMITS PRIOR TO BEGINNING CONSTRUCTION.
3. WHEN COMPLETED CONTACT CITY INSPECTOR FOR FINAL APPROVAL.

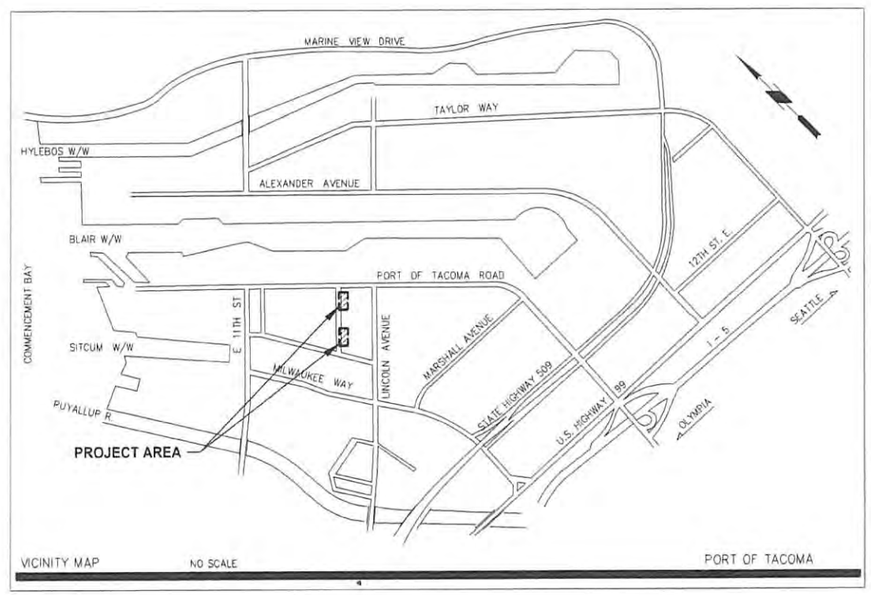

PROJECT CONTACT INFORMATION

OWNER - PORT OF TACOMA

CONSULTING ENGINEER - MOFFATT & NICHOL

BYRON HALEY, P.E.
PROJECT MANAGER
PHONE: (206) 622-0222
EMAIL: BHALEY@MOFFATTNICHOL.COM

SHEET LIST INDEX

SHEET NUMBER	SHEET TITLE
WO-01	COVER SHEET AND SHEET INDEX
WO-02	GENERAL NOTES
WO-03	SITE PREP, EROSION CONTROL PLANS - SHEET 1
WO-04	SITE PREP, EROSION CONTROL PLANS - SHEET 2
WO-05	SITE PLAN - SHEET 1
WO-06	SITE PLAN - SHEET 2
WO-07	DRIVEWAY DETAILS
WO-08	BIOSWALE PLAN
WO-09	BIOSWALE DETAILS

Plotted By: Magana, Abel 11/21/2019 10:53 AM

GENERAL

- The following special provisions are to be used in conjunction with the "2010" Standard Specifications for Road, Bridge and Municipal Construction" and "Standard Plans for Road, Bridge and Municipal Construction" as prepared by the Washington State Department of Transportation (WSDOT). State Standard Specifications are available through WSDOT, by mail at Pre-Contract Section, P.O. Box 47408, Olympia, WA 98504-7408, or by telephoning (360) 705-7430.
- Any inconsistency between these work order drawings and the 2010 Standard Specifications or the WSDOT Standard Plans shall be resolved by the following order of precedence (e.g., 1 presiding over 2, 3, and so forth):
  1. Approved Work Order Drawings
  2. 2010 Standard Specifications
  3. WSDOT Standard Plans
- Any revisions to these plans must be reviewed and approved by the City of Tacoma Department of Public Works prior to any implementation in the field.
- Contractors shall familiarize themselves with the site and shall bring any discrepancies to the attention of the Engineer prior to undertaking the affected work.
- Any discrepancy in these drawings, specifications, these notes, and the site conditions shall be reported to the Engineer, who shall correct such discrepancy in writing after reviewing any changes. Any work done by the Contractor after the discovery of such discrepancy shall be done at the Contractor's risk. The Contractor shall verify and coordinate the dimensions among all drawings prior to proceeding with any work.
- A pre-construction meeting shall be held at the City of Tacoma with the applicant, contractor, and City inspectors prior to issuance of a permit.

ADDITIONAL PERMITS

- Separate permits are required for all retaining walls, grading, and erosion control. Adherence to all conditions of these permits is required as a part of this plan.
- Separate permits are required for sidewalk installation as well as curb and gutter removal and driveway construction when constructed at building permit stage.
- Separate storm and sanitary sewer connection permits are required for connections to the sanitary or storm sewer system.

UTILITIES

- The existing underground utilities shown hereon are based upon existing record drawings and are not guaranteed to be accurate, nor all-inclusive.
- All utilities must be verified prior to construction. If the project requires any excavation, the developer/contractor is required to call the Utility Underground Location Center at (800) 424-5555 at least two days before starting such excavation in accordance with RCW 19.122.
- It shall be the Contractor's responsibility to protect, in place, all utilities and/or structures whether shown or not shown on this plan. Damage due to the Contractor's operations shall be repaired at the Contractor's expense.

EXCAVATION

- If workers enter any trench or other excavation four feet or more in depth that does not meet the open pit requirements of Section 2-09.3(3)B, it shall be shored and braced. All trench safety systems shall meet the requirements of the Washington Industrial Safety and Health Act, Chapter 49.17 RCW. The Contractor alone shall be responsible for all worker safety, and neither the City of Tacoma nor the Engineer of record assumes any responsibility.

PAVEMENT PREPARATION / RESTORATION

- Additional removal and replacement of pavement may be required to provide proper transition/crown as directed by the City of Tacoma Construction Inspector in the field.
- The street sections shown on this plan are designed to be placed upon a firm and unyielding base.
- Subgrade compaction shall be tested by a professional geotechnical consultant prior to placing base material.
- Pavement restoration shall be constructed in accordance with the City of Tacoma Restoration policy.

HOT MIX ASPHALT

- The hot mix asphalt shall be HMA CL 1/2 inch PG 64-22. Mix design shall be based on Standard Plan PD-01-Pavement Design Standards.
- Section 5-04.3(8)A 'Acceptance Sampling and Testing' of the Standard Specifications is deleted.
- All hot mix asphalt shall be compacted to a minimum of 92 percent of the maximum density as determined by AASHTO T209. All hot mix asphalt utilized shall be considered compactable. The level of compaction attained will be determined as the average of not less than 5 nuclear density gauge tests taken on the day the mix is placed (after completion of the finish rolling) at randomly selected locations within each lot. The quantity represented by each lot will be no greater than a single day's production or approximately 400 tons, whichever is less.
- All testing results shall be provided to the City within 48 hours of the test.
- Control lots not meeting the minimum density standard shall be removed and replaced with satisfactory material.
- In addition to the randomly selected locations for test of the control lot, the Engineer reserves the right to test any area which appears defective and to require further compaction of areas that fall below acceptable density readings. These additional tests shall not impact the compaction evaluation of the entire control lot.
- Hot mix asphalt pavement shall not be placed on any traveled way between October 1 and April 1 without written approval from the Construction Division Manager.
- No traffic shall be allowed on any newly placed pavement without the approval of the inspector.

CONCRETE

- Concrete pavement mix design shall be based on Standard Plan PD-01-Pavement Design Standards.
- Cold Weather Concrete Work. The following requirements for placing concrete shall be in effect from November 1 to April 1:
  1. The Engineer shall be notified at least 24 hours prior to any concrete placement.
  2. Weather permitting, all concrete placement shall be completed no later than 2:00 p.m. each day.
  3. Where forms have been placed and the subgrade has been subjected to severe frost, no concrete shall be placed until the ground is completely thawed. At that time, the forms shall be adjusted and subgrade repaired as determined by the Engineer.
- Curing of concrete shall be in accordance with Section 5-05.3(13) of the Standard Specifications.
- The slump for concrete used for sidewalks shall not exceed four inches +/- one inch.
- Sidewalks and curb ramps shall be constructed in accordance with ADA Standards for Accessible Design, 28 CFR, Part 35 and as supplemented by the Public Works Right of Way Accessibility Guidelines (PROWAG).

SANITARY AND STORM SEWERS

- 7-08.3(2)G Jointing of Dissimilar Pipe:

Dissimilar pipe shall be joined by use of rigid couplings manufactured by Romac Industries, Inc., or Engineer approved equal.

- 7-08.3(2)F Plugs and Connections:

Rigid Couplings, manufactured by Romanc Industries, Inc., or Engineer approved equal, shall be used at any pipe joint in which bell and spigot or fused joints are not used. Flexible couplings are not permitted.

- Section 7-04 of the Standard Specification is deleted. Storm sewers shall meet all the requirements of sanitary sewers.
- Sewers and appurtenances shall be cleaned and tested after backfilling by either exfiltration or low-pressure air method at the option of the Contractor, except where the ground water table is such that the Engineer may require the infiltration test.
- All sanitary and storm sewers shall be video inspected by City Forces prior to paving where paving occurs over sewers. All other sewers will be video inspected prior to final acceptance.
- All abandoned pipes encountered during construction and new storm and sanitary sewer stub outs shall be sealed with a watertight pipe plug.
- All frames and grates for standard catch basin inlets on this project shall be "vaned" type and shall conform to that shown on WSDOT Standard Plan No. B30.30-00.
- Recycled concrete shall not be used for pipe zone backfill.

MISCELLANEOUS

- Any fence or structure replaced and/or relocated shall be maintained to remain functional.
- Independent quality assurance sampling and testing will be provided by a certified independent laboratory for all improvements within the right-of-way. All special inspection reports shall be forwarded to the Construction Division Office on a monthly basis, and / or as requested by the construction inspector.
- The Contractor shall only use those hydrants designated by the agency in charge of water distribution and in strict accordance with its requirements for hydrant use. Water applied by the Contractor shall not be from residential sources.

PRIVATE WORK ORDER GENERAL NOTES

GRADING, EXCAVATION, AND EROSION CONTROL NOTES

- All work is to be done in accordance with the approved grading plan, soils report, the most current WSDOT Standard Specification For Road, Bridge And Municipal Construction and the current Tacoma Surface Water Management Manual.
- When construction operations are such that debris from the work is deposited on the streets, the Contractor shall, as a minimum, remove on a daily basis any deposits or debris which may accumulate on the roadway surface. Should daily removal be insufficient to keep the streets clean, the Contractor shall perform removal operations on a more frequent basis. If the City of Tacoma Construction Inspector determines that a more frequent cleaning is impractical or if the Contractor fails to keep the streets free from deposits and debris resulting from the work, the Contractor shall, upon order of the City of Tacoma Construction Inspector, provide facilities for, and remove all clay or other deposits from the tires or between wheels before trucks or other equipment will be allowed to travel over paved streets. Should the Contractor fail or refuse to clean the streets in question, or the trucks or equipment in question, the City of Tacoma Construction Inspector may order the work suspended at the Contractor's risk until compliance with the Contractor's obligations is assured, or the City of Tacoma Construction Inspector may order the streets in question cleaned by others and such costs incurred by the City in achieving compliance with these requirements, including cleaning of the streets, shall be deducted from the work order account.
- The Contractor shall protect existing drainage structures using acceptable methods and materials as shown on this plan. If the methods and materials as shown on this plan are not adequate, the City of Tacoma Construction Inspector may require additional/alternative methods for erosion control and/or protection of existing drainage structures. Additional or alternative methods shall be submitted by the design engineer and accepted by the City of Tacoma Construction Inspector. Any damage caused to the City of Tacoma storm sewer system as a result of the work outlined on this plan shall be the sole responsibility of the Contractor. Resolving said damage may include, but not be limited to, the cleaning of the drainage system in question by the Contractor.
- Watering provisions when applicable must be in place to prevent dust from becoming air borne. Violation of this condition will result in a stop work order until corrected.
- Fill that will support a street section or other structures shall be placed under the inspection of a licensed Geotechnical Engineer. Soil to be placed shall be tested and compacted to 95 percent of its maximum density. Engineer shall document existing site conditions, soil and its placement and allowable bearing capacity submitted. Standard requirements for cuts and fill are contained in the WSDOT Standard Specifications For Road, Bridges, and Municipal Construction.
- A stormwater pollution prevention plan is required for all work order projects. The plan must be in accordance with the current Tacoma Surfacewater Management Manual.

HYDROSEEDING

- All areas that are cleared and grubbed, graded, excavated or filled are subject to hydroseeding. Any of these areas that are left unpaved or unlandscaped shall be hydroseeded under the direction and approval of the Construction Inspector.
- Hydroseed only during the periods of April 1 though May 31 or September 1 though October 15. This hydroseeding requirement may be met during the months of June through August if irrigation is provided.
- Maintain hydroseeding throughout the winter wet season.

EROSION CONTROL MEASURES

A. Minimum Erosion Control measures shall include:
   1. Construction entrance.
   2. Perimeter erosion/sedimentation control.
   3. Protection of catch basins.
   4. Stabilization of exposed soils.
B. All erosion control shall be in place prior to clearing.
C. Erosion control measures shall be maintained at all times to the approval of the Construction Inspector.
D. Should temporary erosion and sedimentation control measures, as shown on plans become inadequate, the contractor shall install facilities as necessary to protect adjacent properties and the City of Tacoma drainage system, meeting approval of the Construction Inspector.
E. Grading, excavation, and filling prohibited. No permits to perform grading, excavation, or filling during the period from October 1st through March 31 shall be issued. EXCEPTION: The Building Official may approve a grading, excavation, or filling plan prepared by a licensed Civil or Geotechnical Engineer which specifically addresses the winter rain season and the associated erosion problems, and issue a permit based on such plan.
F. Call for inspection of the Construction Inspector upon completion of:
   1. Staking of clearing limits.
   2. Installation of erosion control and prior to site grading.
   3. Prior to removal of erosion control devices.
G. All material removed from site shall be placed only at a permitted site. Verify location of destination of material prior to exportation.
H. Traffic control provisions as approved by the traffic engineer shall be adhered to at all times.
I. Trees to be removed shall be clearly marked for removal. Trees to be saved shall be fenced with barricade fence at the drip line (outer edge of tree branches) to keep construction vehicles from compacting root zone and killing trees. This fencing shall be maintained until construction ends.

RECORD DRAWINGS CRITERIA FOR ACCEPTANCE OF ALL PRIVATE WORK ORDERS

- All revisions to the approved plans must be approved by the City of Tacoma Public Works Construction Division prior to implementation of the changes.
- A determination at the time of proposal shall be made whether the revision can be addressed with red line drawings submitted as a part of the record drawings or will require formal submission for approval.
- Record drawings shall show the station, offset, centerline and gutter flowline elevations, to nearest 0.01 foot, for all horizontal and vertical roadway alignment changes, at the intersection end of radius points and at the beginning and end of new paving.
- Record drawings shall show the station, offset, invert, and rim elevations to the nearest 0.01 foot for all storm and sanitary sewer structures. (i.e.: manholes, catch basins, etc.)
- After any new storm and/or sanitary sewer(s) have been cleaned and the manholes channeled, the main(s) shall be televised to provide a record of the constructed conditions and to verify side sewer connection locations by the City of Tacoma Public Works Sewer Maintenance Division.
- The property side ends of the side sewers shall be marked in the field by means of a 2-inch by 4-inch board and locate wire that extends from the flow line of the side sewer to at least 1 foot above the finished lot grade. Record drawings shall show all side sewers and shall locate them by measurements from permanent objects. (i.e.: curb, property corner, etc.) In addition, the depth of all side sewers shall be noted on the record drawings and locate board.
- Record drawings shall be received and accepted prior to issuing side sewer connection permits or release of performance bonds.
- Record drawings shall show vertical and horizontal datum for survey monuments (existing or new construction) within the limits of the project.
- Record drawings shall consist of a clean set of approved work order drawings with all changes noted above shown in red ink.
- Record drawings must be submitted within 30 days of substantial completion or City survey crews will collect the necessary data and bill against the work order.

MONUMENT REMOVAL PERMIT PROCESS

"No survey monument shall be removed or destroyed (the physical disturbance or covering of a monument such that the survey point is no longer visible or readily accessible) before a permit is obtained from the Department of Natural Resources (DNR)." WAC 332-120-030(2) states "It shall be the responsibility of those performing construction work or other activity (including road and street resurfacing projects) to adequately search the records and the physical area of the proposed construction work or other activity for the purpose of locating and referencing any known or existing survey monuments." Construction shall not commence until WAC outlined in Chapter 332-120 is complied with.

SEWERS AND STORM

- Clearing stakes if needed.
- Stakes every 50 feet plus grade breaks. Try to maintain 12 foot offsets in streets and 8 foot offsets in alleys.
- Double offsets at manholes and catch basins (ahead and back stakes at angle points).
- Catch basin station shall be to the centerline of the basin. Catch basin offsets shall be to the face of the curb.

RESIDENTIAL STREETS

- Clearing stakes as needed.
- Slope stakes every 50 feet and grade breaks if cuts or fills exceed 2 feet.
- Curb stakes every 50 feet and grade breaks, on 4 foot offset to the face of curb. Curb stakes are set to the top of curb grade (Blue Tops).
- Also stake the beginning and end of all approaches.
- No centerline of street grades unless the street grade is warped. If street grades are needed, set blue tops for each course.

ARTERIAL STREETS

- Clearing stakes as needed.
- Slope stakes every 50 feet and grade breaks if cuts or fills exceed 2 feet.
- Curb stakes every 50 feet and grade breaks, on 4 foot offset to the face of curb.
- Curb stakes are set to the top of curb grade (Blue Tops). Also stake the beginning and end of all approaches.
- Stake centerline and quarterline grade every 50 feet and grade breaks at grade for each course.

ALLEYS

- Stake both sides every 50 feet and grade breaks, on a 2 foot offset to the edge of paving, with a cut of fill to edge of paving on high side and flow line on low side.

SIDEWALKS

- Offsets for walks are set on 50' intervals and grade breaks normally at 2 foot to edge of walk and at edge of walk grade (Blue Tops).
- Sidewalk alignment is normally at 5 feet from the face of curb. No walk grades are needed if curbs are built.

HORIZONTAL AND VERTICAL CURVES

- Grade stakes must be set every 25 feet and grade breaks with a minimum of 3 stakes for each curve. Radius points on street Returns.

Q:\LB\8897-07\CADD_ACTIVE_SHEETSET\889707-WO-02.DWG

moffatt & nichol

Tacoma

NO	REVISION	DATE	APPD

FINAL CONSTRUCTION CHECKED	DATE 11/19/19	SCALE AS NOTED
BY	DESIGNED ALP	CHECKED BJH
DATE	REVIEW PM SLG	PROJECT NAME
FIELD BOOK #	DRAWN BY SAME	

CITY OF TACOMA
DEPARTMENT OF PUBLIC WORKS

LOT F REDEVELOPMENT
HUSKY PROCESSING LANES
GENERAL NOTES

WO-02

SHEET NO.
SHEET 2 OF 9

Plotted By: Magana, Abel 11/21/2019 10:54 AM

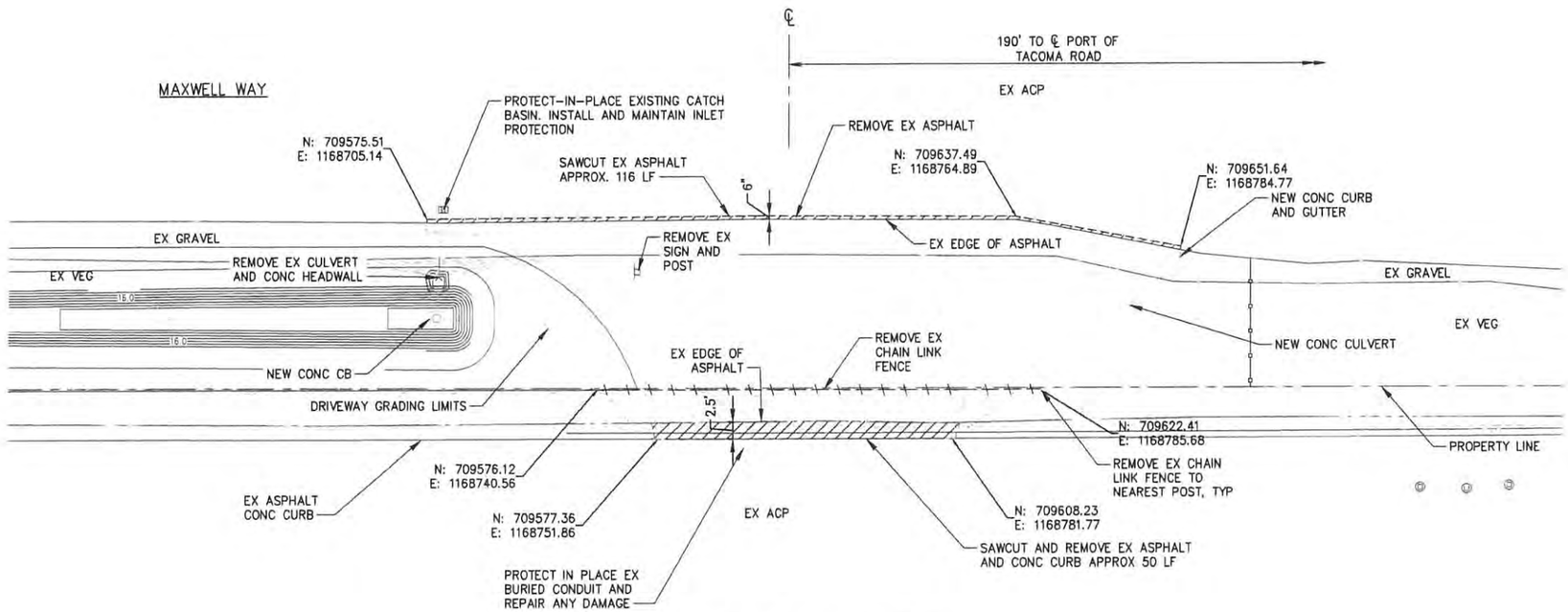

1 WO-03 ENLARGED PLAN - MAXWELL EXIT
SCALE: 1" = 10'

NOTES:

1. DELINEATE SAWCUT LINE AS FIRST ORDER OF WORK. CONTRACTOR SHALL RECEIVE APPROVAL FROM THE ENGINEER PRIOR TO SAWCUT.
2. SAWCUT COORDINATES ARE TO THE SAWCUT CORNER.

LEGEND:

—SF—	SILT FENCE.
—o—o—o—	HIGH VISIBILITY CONSTRUCTION FENCE
— — — —	SAWCUT
	REMOVE EX PAVEMENT
	GRADING LIMITS
—\—\—\—	DEMOLISH EX CHAIN LINK FENCE

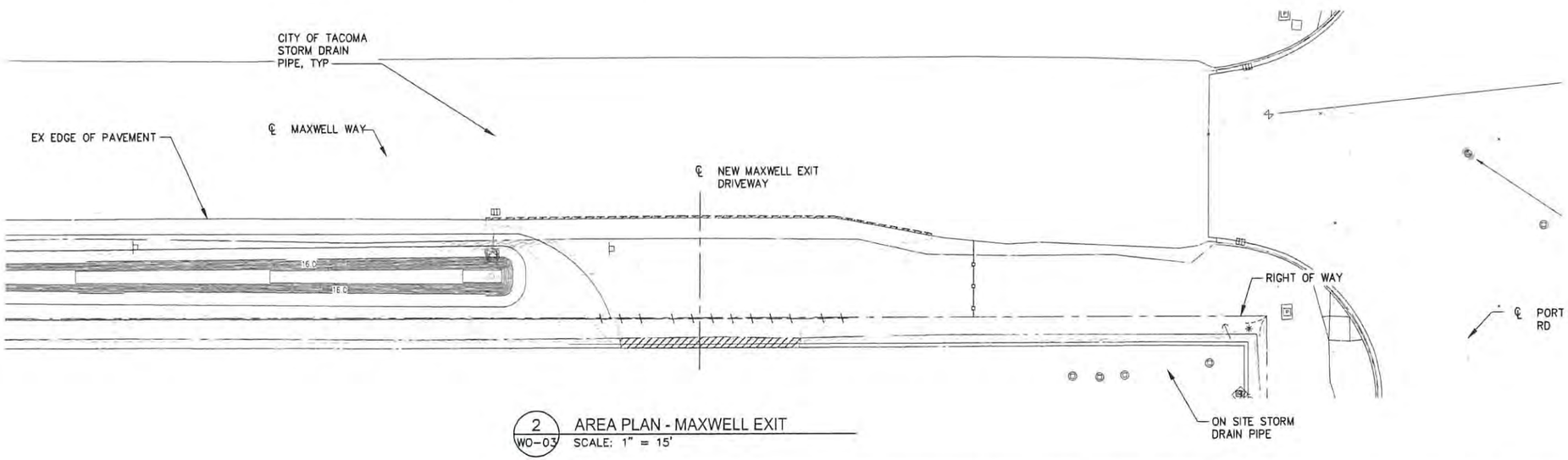

2 WO-03 AREA PLAN - MAXWELL EXIT
SCALE: 1" = 15'

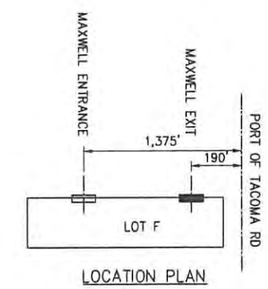

LOCATION PLAN

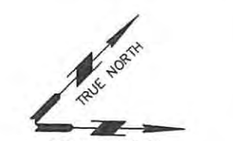

PROJECT NORTH

10' 0' 10' 20'
SCALE: 1"=10'

15' 0' 15' 30'
SCALE: 1"=15'

moffatt & nichol

Tacoma

NO	REVISION	DATE	APPD

FINAL CONSTRUCTION CHECKED | BY | DATE | FIELD BOOKS

DATE 11/19/19 | SCALE AS NOTED | DESIGNED ALP | CHECKED BJH | SENIOR PM SLG | PROJECT NAME | DRAWING NAME

CITY OF TACOMA
DEPARTMENT OF PUBLIC WORKS

LOT F REDEVELOPMENT
HUSKY PROCESSING LANES
SITE PREP, EROSION CONTROL PLANS - SHEET 1

CAST CONSTRUCTION DIVISION MANAGER

WO-03

SHEET NO. SHEET 3 OF 9

Q:\LB18897-07\CADD_ACTIVE_SHEETSET\889707-WO-03.DWG

Plotted By: Magana, Abel 11/21/2019 10:54 AM

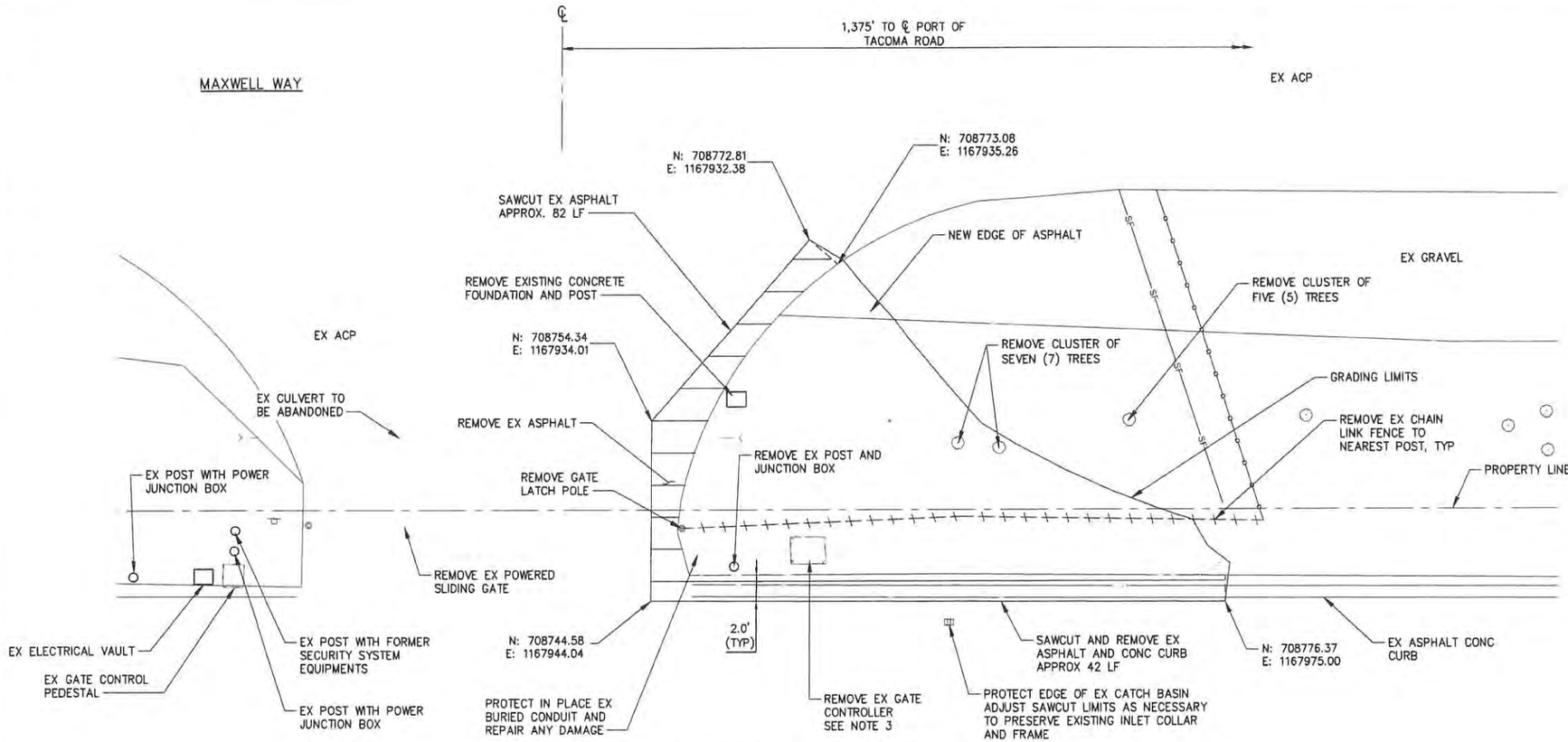

1 WO-04 ENLARGED PLAN - MAXWELL ENTRANCE
SCALE: 1" = 5'

NOTES:

1. DELINEATE SAWCUT LINE AS FIRST ORDER OF WORK. CONTRACTOR SHALL RECEIVE APPROVAL FROM THE ENGINEER PRIOR TO SAWCUT.
2. SAWCUT COORDINATES ARE TO THE SAWCUT CORNER.
3. REMOVE, CLEAN AND SAVE EXISTING GATE CONTROLLER FOR DELIVERY TO PORT OF TACOMA.
4. TREE REMOVAL SHALL BE UNDER ADVISEMENT OF PORT OF TACOMA ENVIRONMENTAL DEPARTMENT.

LEGEND:

—SF—	SILT FENCE
—o—o—o—	HIGH VISIBILITY CONSTRUCTION FENCE
— — — —	SAWCUT
	REMOVE EX PAVEMENT
	GRADING LIMITS
—\—\—\—	DEMOLISH EX CHAIN LINK FENCE/CURB

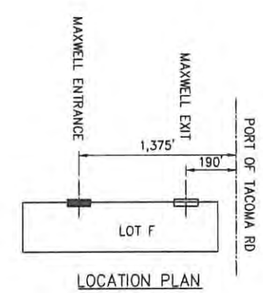

LOCATION PLAN

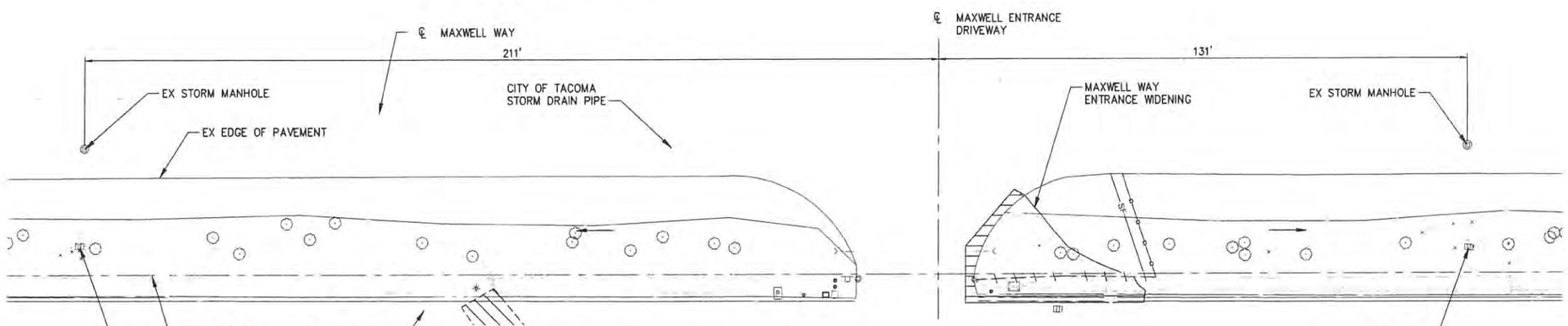

2 WO-04 AREA PLAN - MAXWELL ENTRANCE
SCALE: 1" = 15'

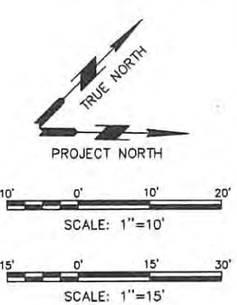

moffatt & nichol

Tacoma

NO	REVISION	DATE	APPD

FINAL CONSTRUCTION CHECKED	DATE 11/19/19	SCALE AS NOTED
BY	DESIGNED JAT	CHECKED BJH
DATE	SENIOR PM SLG	PROJECT NAME
FIELD BOOKS	DRAWING NAME	

CITY OF TACOMA
DEPARTMENT OF PUBLIC WORKS

LOT F REDEVELOPMENT
HUSKY PROCESSING LANES
SITE PREP, EROSION CONTROL PLANS - SHEET 2

WO-04

SHEET NO. 4 OF 9

Q:\LB8897-07\CADD_ACTIVE_SHEETSET\889707-WO-04.DWG

Plotted By: Magana, Abel 11/21/2019 10:55 AM

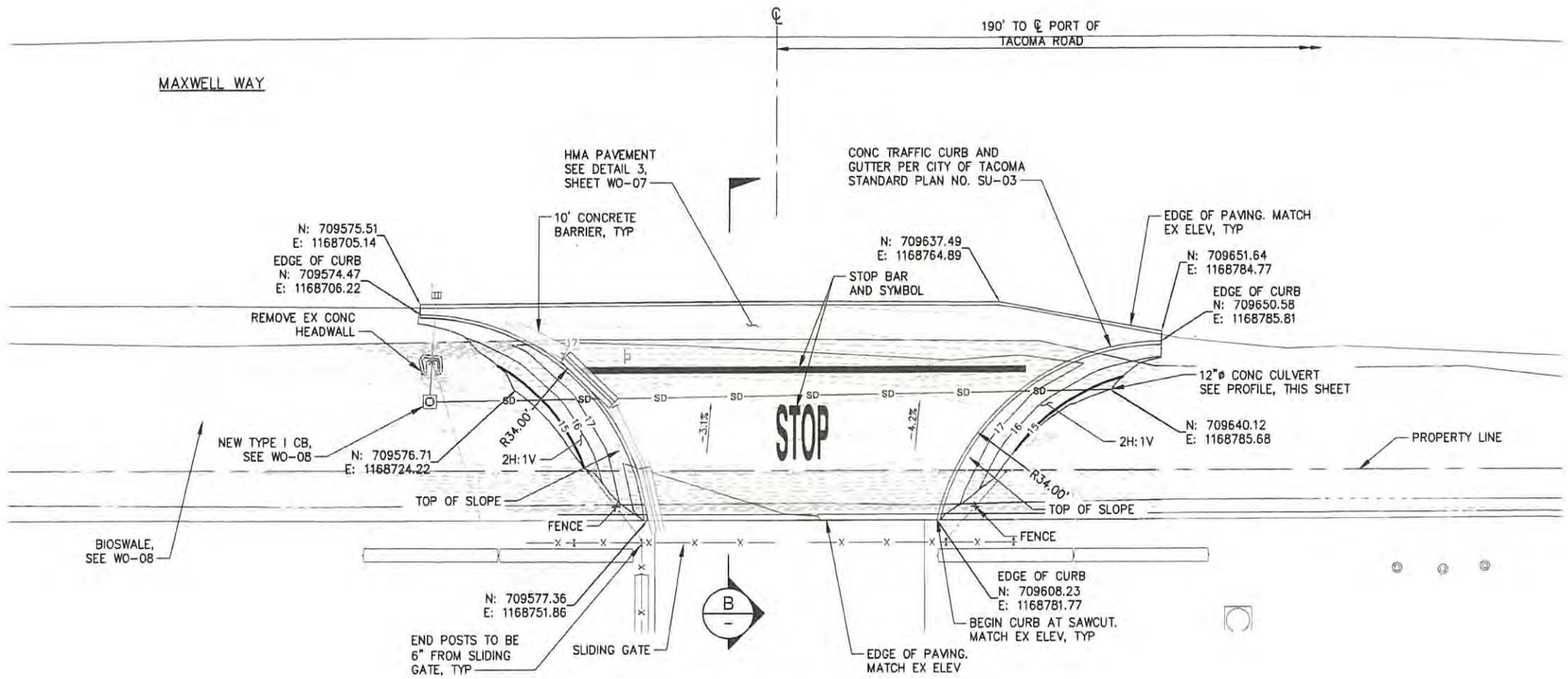

1 WO-05 ENLARGED PLAN - MAXWELL EXIT
SCALE: 1" = 10'

NOTES:

1. STRIPING SHALL BE 4" WHITE UNLESS OTHERWISE NOTED.
2. STABILIZE GRADED SURFACES WITH EROSION CONTROL BLANKETS PRIOR TO ESTABLISHING FINAL COVER TYPE. HYDROSEED ALL FINISHED PERVIOUS SURFACES.

LEGEND:

- SD — CULVERT
- GRADING LIMITS
- X — X — CHAIN LINK FENCE/ GATE
- FULL DEPTH HMA. SEE 1/WO-05

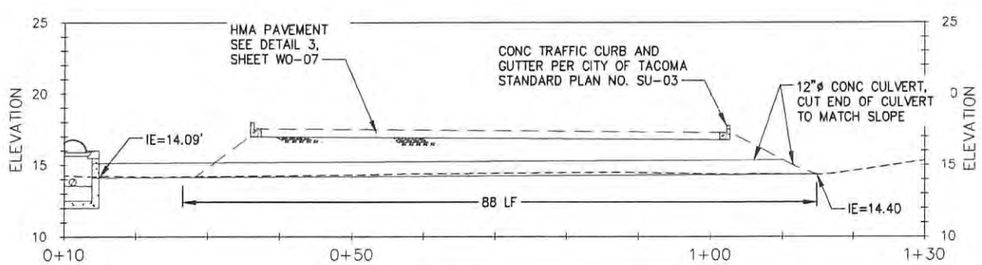

A – CULVERT PROFILE
SCALE: 1" = 10' (H) 1"=5' (V)

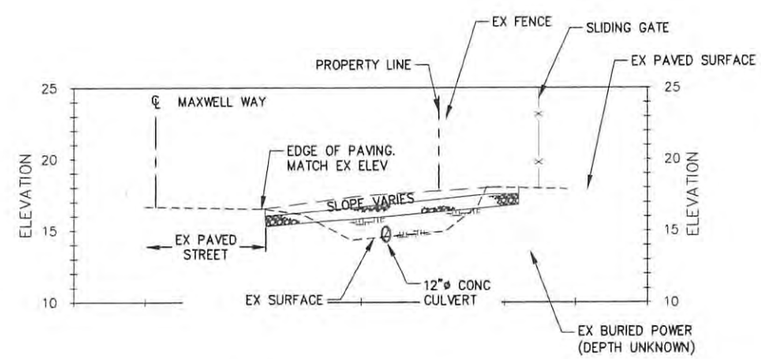

B – SECTION - MAXWELL EXIT
SCALE: 1" = 10' (H) 1"=5' (V)

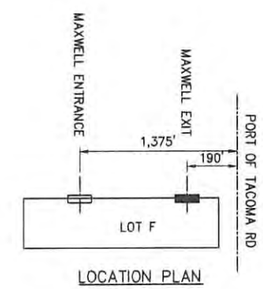

LOCATION PLAN

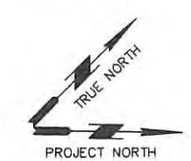

5' 0' 5' 10'
SCALE: 1"=5'

10' 0' 10' 20'
SCALE: 1"=10'

moffatt & nichol

Tacoma

NO	REVISION	DATE	APPD

FINAL CONSTRUCTION CHECKED	DATE 11/19/19	SCALE AS NOTED
BY	DESIGNED ALP	CHECKED BJH
DATE	SENIOR PM SLG	PROJECT NAME
FIELD BOOKS	DRAWING NAME	

CITY OF TACOMA
DEPARTMENT OF PUBLIC WORKS

LOT F REDEVELOPMENT
HUSKY PROCESSING LANES
SITE PLAN - SHEET 1

WO-05

SHEET NO.
SHEET 5 OF 9

Q:\LB\8897-07\CADD_ACTIVEL_SHEETSET\889707-WO-05.DWG

Plotted By: Magana, Abel 11/21/2019 11:03 AM

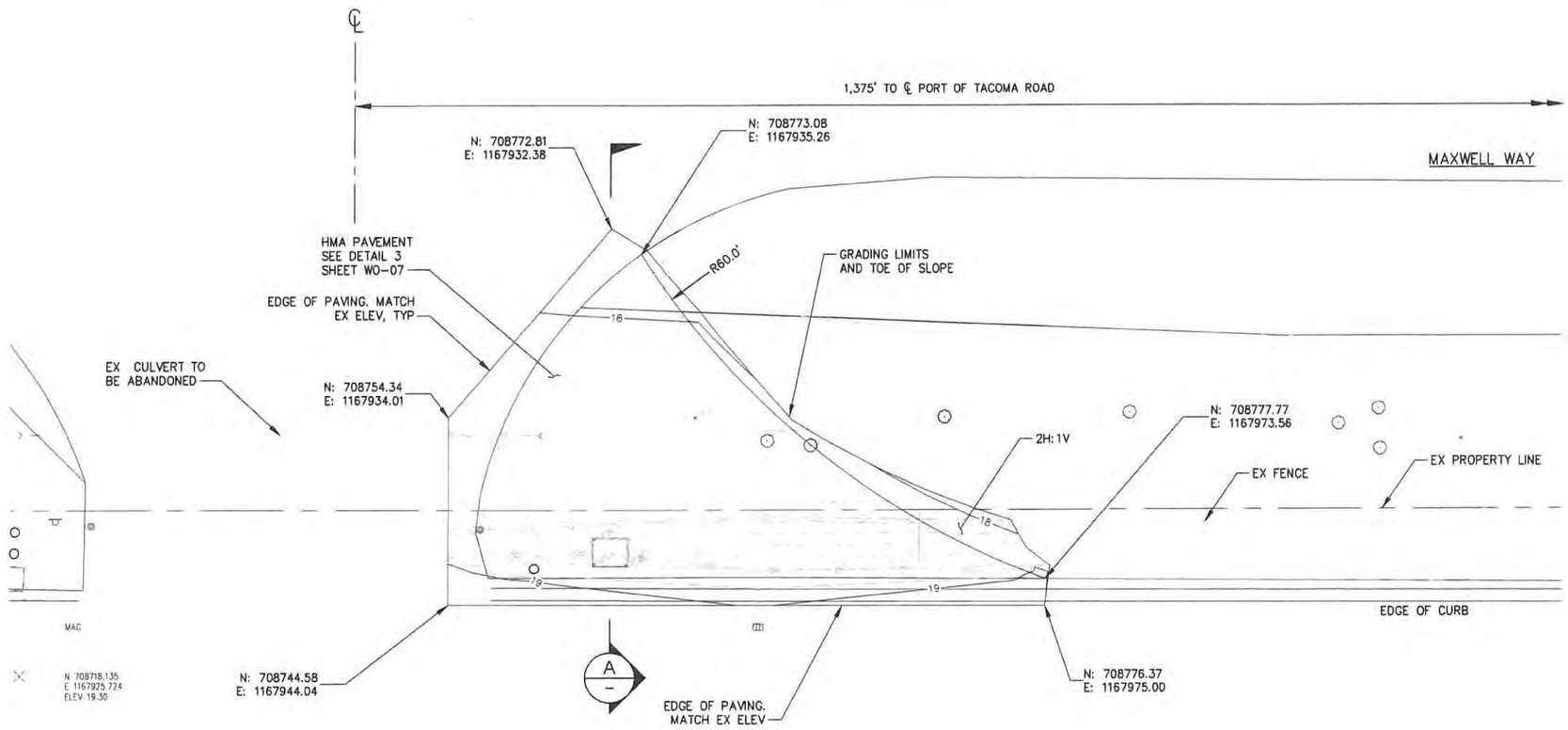

1 / WO-06 ENLARGED PLAN - MAXWELL ENTRANCE
SCALE: 1" = 5'

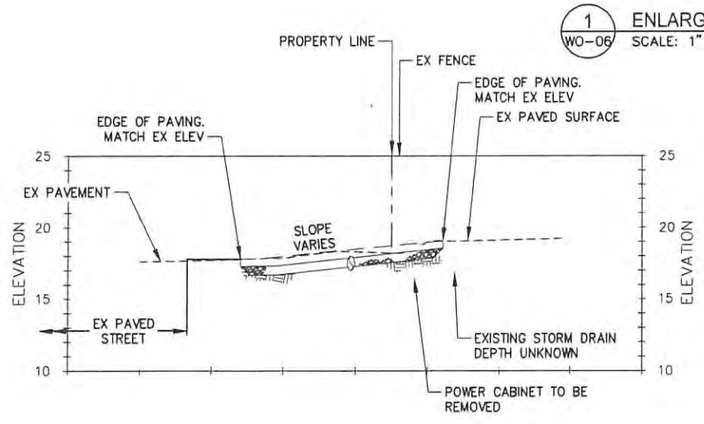

A / – SECTION - MAXWELL ENTRANCE
SCALE: 1" = 10' (H) 1"=5' (V)

NOTES:

1. STABILIZE GRADED SURFACES WITH EROSION CONTROL BLANKETS PRIOR TO ESTABLISHING FINAL COVER TYPE. HYDROSEED ALL FINISHED PERVIOUS SURFACES.
2. PROPOSED CULVERT EXTENSION SHALL BE ENCASED THROUGH LIMITS OF NEW PAVEMENT CONSTRUCTION. SEE DETAILS ON SHEET 5. ENCASEMENT NOT SHOWN FOR CLARITY.

LEGEND:

- SD — CULVERT
- GRADING LIMITS
- X — X — CHAIN LINK FENCE/ GATE
- FULL DEPTH HMA

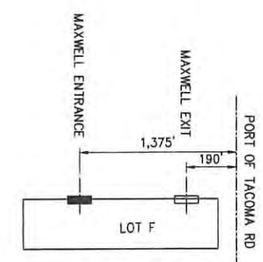

LOCATION PLAN

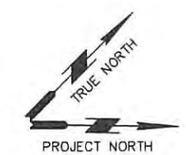

PROJECT NORTH

5' 0' 5' 10'
SCALE: 1"=5'

10' 0' 10' 20'
SCALE: 1"=10'

moffatt & nichol

Tacoma

NO	REVISION	DATE	APPD

FINAL CONSTRUCTION CHECKED — BY: — DATE: — FIELD BOOKS:

DATE 11/19/19 | SCALE AS NOTED | DESIGNED JAT | CHECKED BJH | SENIOR PM SLG | PROJECT NAME | DRAWING NAME

CITY OF TACOMA
DEPARTMENT OF PUBLIC WORKS

LOT F REDEVELOPMENT
HUSKY PROCESSING LANES
SITE PLAN - SHEET 2

ASST. CONSTRUCTION DIVISION MANAGER

WO-06

SHEET NO. 6 OF 9

Q:\LB\8897-07\CADD_ACTIVE_SHEETSET\889707-WO-06.DWG

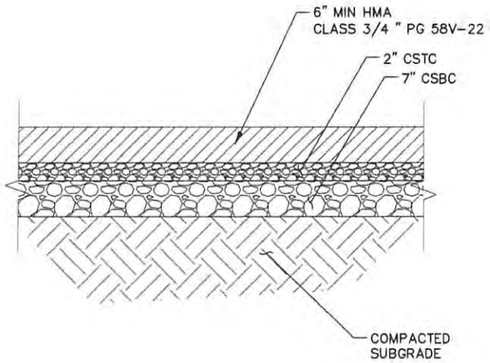

1 / - DETAIL - HMA PAVEMENT
SCALE: NTS

NOTES:

1. COMPACT BEDDING AND BACKFILL MATERIAL TO 95% MAXIMUM DENSITY.
2. GRAVEL BACKFILL SHALL BE 1 1/2" MINUS AS SPECIFIED IN SECTION 9-03.12(4) OF THE WSDOT STANDARD SPECIFICATIONS.
3. CRUSHED SURFACING TOP COURSE (CSTC) AND CRUSHED SURFACING BASE COURSE (CSBC) SHALL BE AS SPECIFIED IN SECTION 9-03.9(3) OF THE WSDOT STANDARD SPECIFICATIONS.

Plotted By: Magana, Abel 11/21/2019 10:55 AM
Q:\LB\8897-07\CADD_ACTIVE_SHEETSET\889707-WO-07.DWG

moffatt & nichol

Tacoma

NO	REVISION	DATE	APPD

FINAL CONSTRUCTION CHECKED
BY
DATE
FIELD BOOKS

DATE 11/19/19 | SCALE AS NOTED
DESIGNED ALP | CHECKED BJH
SENIOR PM SLG | PROJECT NAME
DRAWING NAME

CITY OF TACOMA
DEPARTMENT OF PUBLIC WORKS

LOT F REDEVELOPMENT
HUSKY PROCESSING LANES
DRIVEWAY DETAILS

WO-07

SHEET NO.
SHEET 7 OF 9

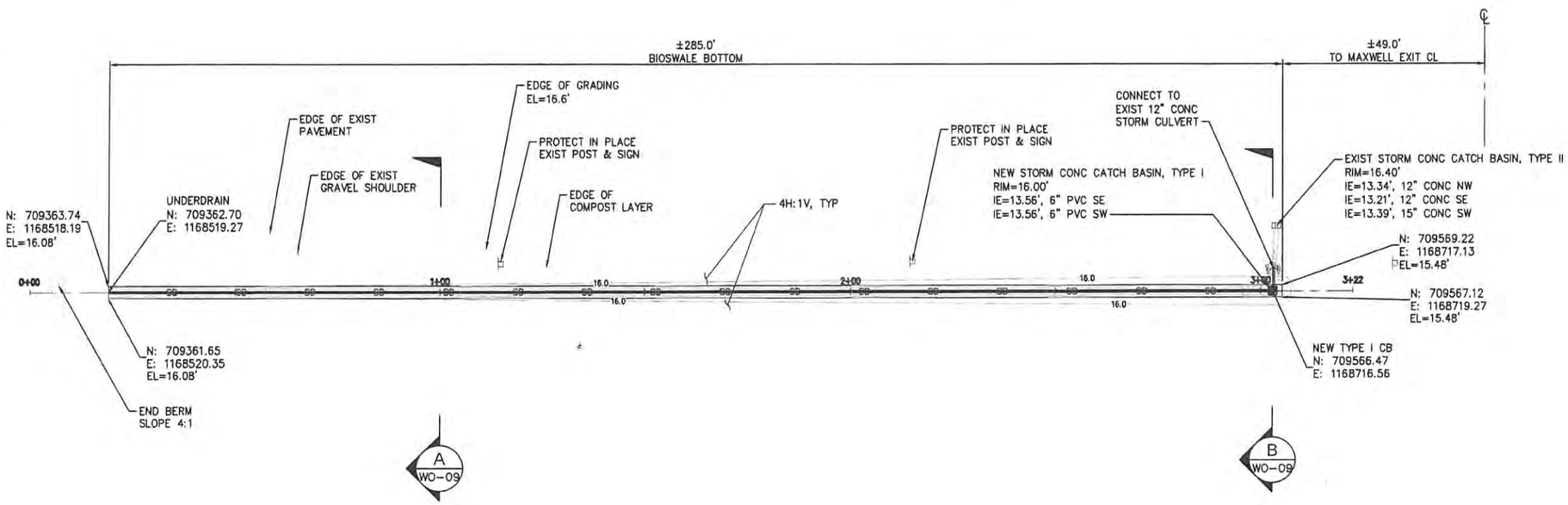

1 WO-08 PLAN - BIOSWALE
SCALE: 1" = 15'

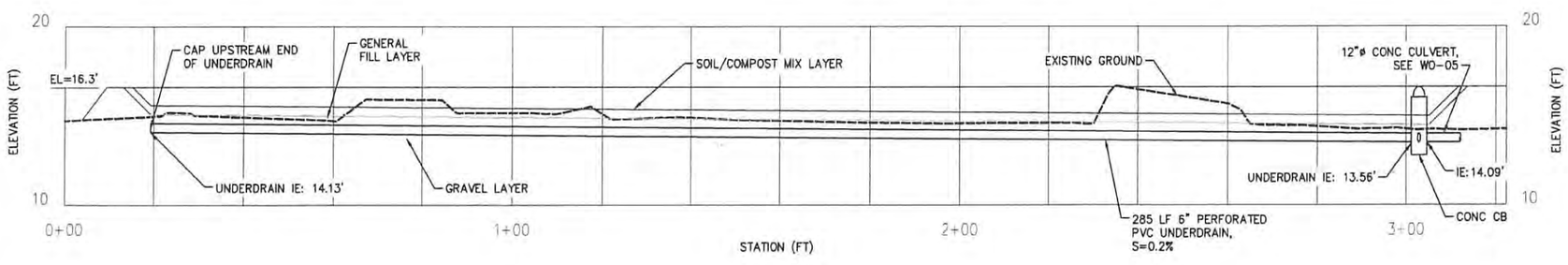

A - PROFILE - BIOSWALE
SCALE: 1" = 15' HORIZONTAL
SCALE: 1" = 60' VERTICAL

NOTES:

1. ELEVATIONS (EL) SHOWN ON PLAN 1 CORRESPOND TO BIOSWALE'S BOTTOM FINISHED GRADE UNLESS NOTED OTHERWISE.
2. EXISTING 12" CONC STORM CULVERT AND HEADWALL SHALL BE FIELD VERIFIED AND PROTECTED IN PLACE DURING EXCAVATION.

LEGEND:

- SD — UNDERDRAIN
- GRADING LIMITS
- BIOSWALE BOTTOM

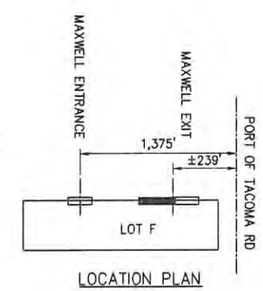

LOCATION PLAN

PROJECT NORTH

15' 0' 15' 30'
SCALE: 1"=15'

moffatt & nichol

Tacoma

NO	REVISION	DATE	APPD

FINAL CONSTRUCTION CHECKED
BY
DATE
FIELD BOOKS

DATE 11/19/19 | SCALE AS NOTED
DESIGNED ADM | CHECKED BJH
SENIOR PM SLG | PROJECT NAME
DRAWING NAME WO-08

CITY OF TACOMA
DEPARTMENT OF PUBLIC WORKS

LOT F REDEVELOPMENT
HUSKY PROCESSING LANES
BIOSWALE PLAN

ASST CONSTRUCTION DIVISION MANAGER

WO-08
SHEET NO
SHEET 8 OF 9

Plotted By: Magana, Abel 11/21/2019 10:56 AM

Q:\LB\8897-07\CADD_ACTIVE_SHEETSET\889707-WO-08.DWG

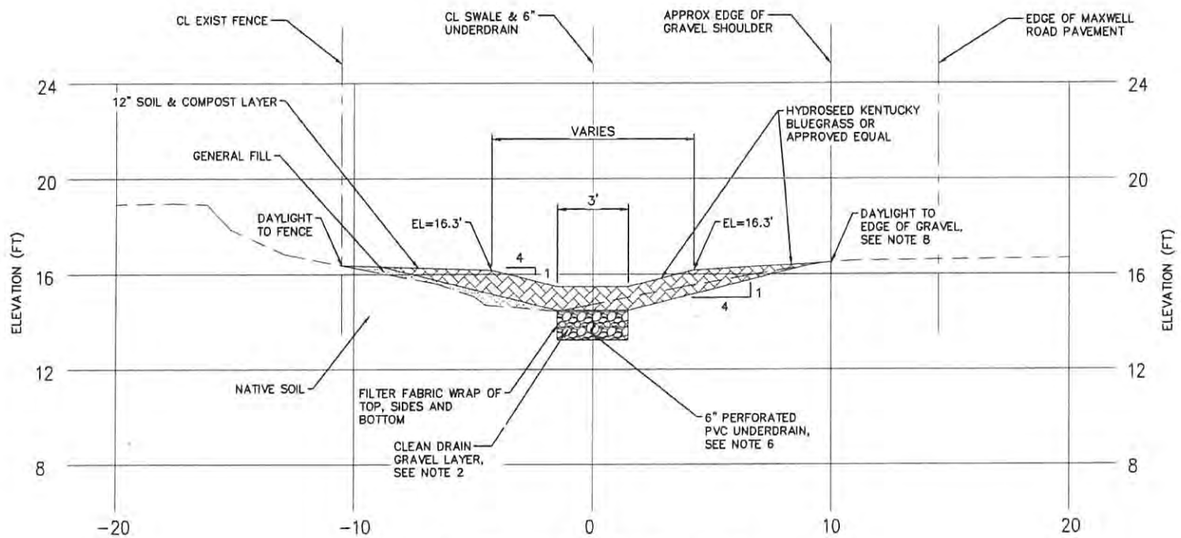

A WO-08 TYPICAL SECTION - BIOSWALE
SCALE: 1"=3'

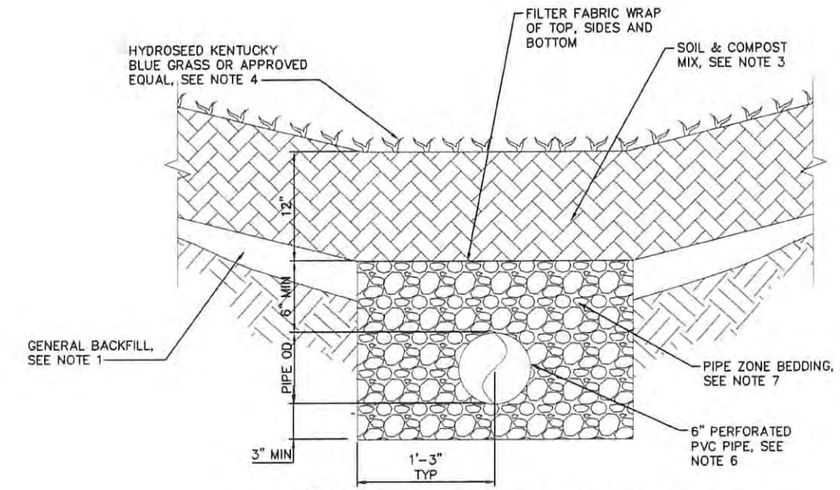

1 – DETAIL - UNDERDRAIN PIPE BEDDING
SCALE: NTS

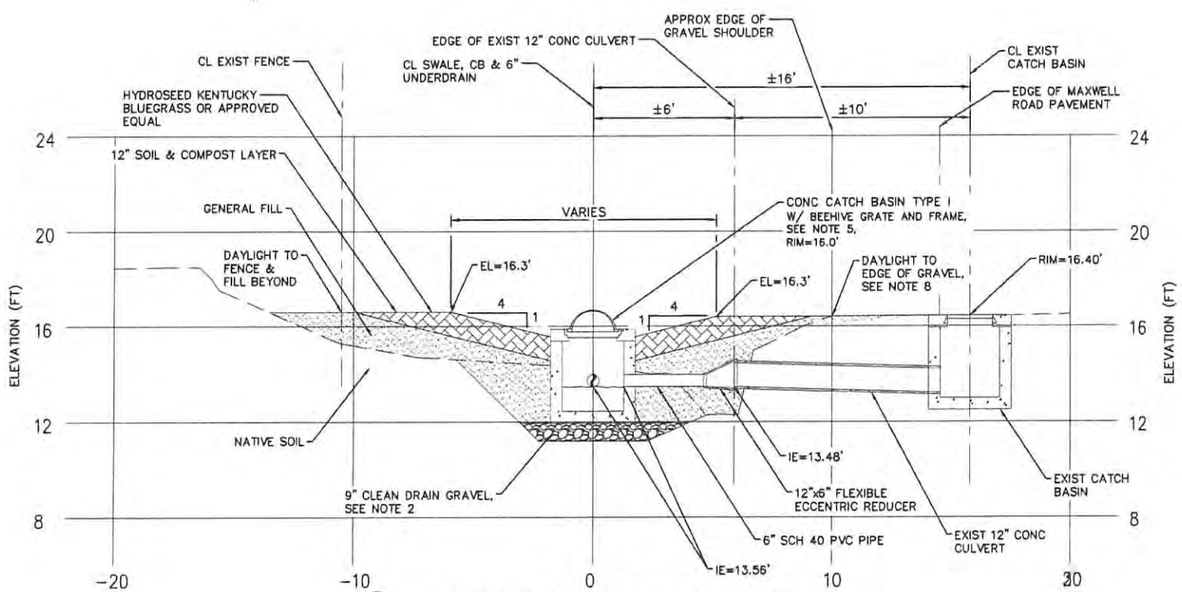

B WO-08 SECTION - BIOSWALE AT EXIST CONC CULVERT
SCALE: 1"=3'

NOTES:

1. GENERAL BACKFILL AS SPECIFIED IN SECTION 9-03.14(2) OF THE WSDOT STANDARD SPECIFICATIONS. COMPACT GENERAL BACKFILL MATERIAL TO 95% MAXIMUM DENSITY.
2. CLEAN DRAIN GRAVEL SHALL BE 5/8" MINUS AS SPECIFIED IN SECTION 9-03.12(4) OF THE WSDOT STANDARD SPECIFICATIONS.
3. AMEND THE SOIL AS NEEDED TO ALLOW EFFECTIVE PERCOLATION OF WATER TO THE UNDERDRAIN AND FOLLOW SOIL CRITERIA STATED ON SECTION 10.4.1.5 OF THE 2016 CITY OF TACOMA SWMM.
4. HYDROSEED KENTUCKY BLUEGRASS OR APPROVED EQUAL FOLLOWING SECTION 10.4.1.6 OF THE 2016 CITY OF TACOMA SWMM.
5. CONC CATCH BASIN TYPE I WITH NEENAH R-4353 BEEHIVE GRATE AND FRAME OR APPROVED EQUAL.
6. UNDERDRAIN SHALL BE SCH40 PVC PERFORATED PIPE OR EQUIVALENT.
7. PIPE ZONE BEDDING SHALL BE AS SPECIFIED IN SECTION 9-03.12(3) OF THE WSDOT STANDARD SPECIFICATIONS. DRAIN GRAVEL SHALL BE ENCLOSED BY GEOTEXTILE FABRIC
8. WHEN DAYLIGHTING TO EDGE OF GRAVEL, SLOPE SHALL ALWAYS BE TOWARD BIOSWALE.

3' 0' 3' 6'
SCALE: 1"=3'

moffatt & nichol

Tacoma

NO	REVISION	DATE	APPD

FINAL CONSTRUCTION CHECKED	DATE 11/19/19	SCALE AS NOTED
BY	DESIGNED ADM	CHECKED BJH
DATE	REVIEW FM SLG	PROJECT NAME
FIELD BOOK	DRAWING NAME WO-09	

CITY OF TACOMA
DEPARTMENT OF PUBLIC WORKS

LOT F REDEVELOPMENT
HUSKY PROCESSING LANES
DRIVEWAY DETAILS

WO-09

SHEET NO.
SHEET 7 OF 9

Plotted By: Magana, Abel 11/21/2019 10:56 AM

O:\LB\8897-07\CADD_ACTIVE_SHEETSET\889707-WO-09.DWG